PART 3: PROFILING

CREATING A BASIC PATH

Profile the outside of the bracket which you used in the Basic Machining Lesson.

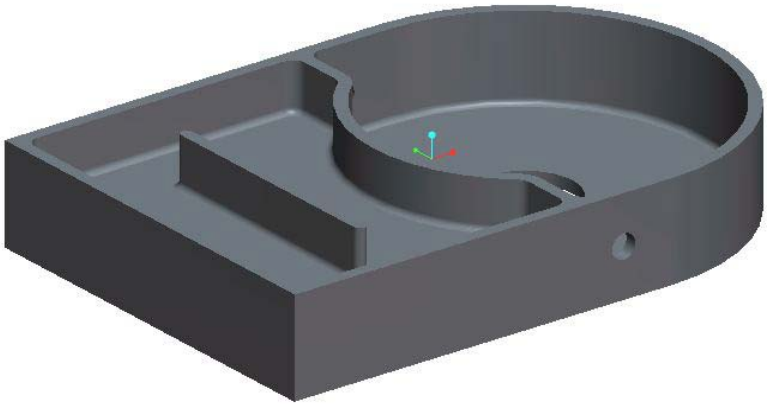

Before starting this tutorial:

Ensure that you have downloaded all CAM files from the write-protected drive (**P:\Courses\41617-CAM**) and placed them on your own drive (**M:**)
Set the **Working Directory** to the directory on your own drive where you placed the CAM files.

If you do not have the file open from the previous Lesson, you can open l**esson2_basic.asm**.

1. Create a **Machine Tool / Work Center**.
   - Choose **Work Center**,  and create a **Machine Tool / Work Center**
   - In the **Milling Work Center** dialogue, choose: **Mill** for *machine type* and 3 **Axis** for *number of axes* (default settings). Leave the dialogue with an **OK.** The **MILL01** now shows on the Model Tree
2. Create an **Operation**
   - Choose **Operation**, 

.To define a **Machine Zero Coordinate system,** select the **CS0** Coordinate system. Leave the dialogue with an **OK.** The **OP020 [MILL 01]** now shows on the Model Tree

   - The **Mill** top pane 

is now accessible.Choose it, and below it choose **Profile Milling**.The **Profile Milling** top ribbon dialogue displays: *- On top of next page...*

This dialogue is a replacement of the **Menu Manager** walk-through menus. It contains several variables, which all must be defined in order to run an **NC sequence**. The yellow color signals which entries are still missing.

The first is **Tool** definition:

- Choose **the Tool icon** .The familiar **Tools setup** appears:
- For *Type*, choose **Milling**
- For tool length, type **75** (mm!)
- For tool diameter, type **25** (mm!)
- To exit, choose **Apply**, followed by **OK** - *The **profile Milling** top dialog replaces the **No Tool** with **01: T0001** for Tool name*

The next entry is the **Reference** tab, defining which faces on the model are to be machined:

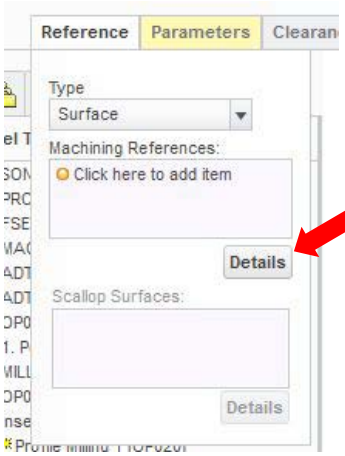

*The Details button will open the **Surface Sets** dialogue**Surface***

- Select the outer vertical faces of the partl, one by one, using the mouse and the *CTRL* button. - *The **Surface Sets** dialogue will list the selected faces.*

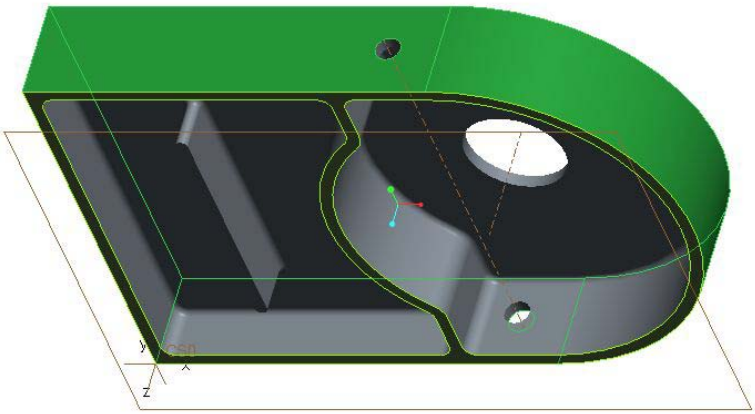

Exterior vertical faces are selected

- Close the **Surface Sets** dialogue with an **OK**

The next entry is theThe **Parameters** tab:

- Choose it, and choose the **Edit Machining Parameters** icon bottom right

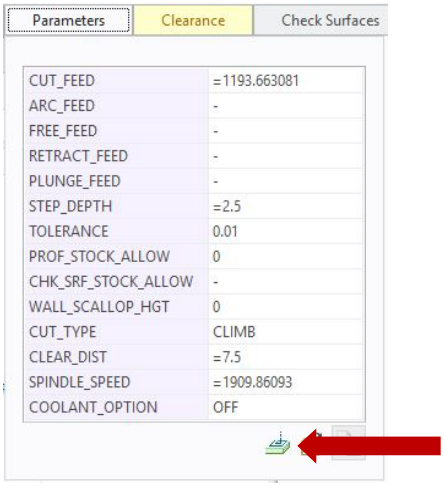

*The four variables you are going to fill in now could be written directly in this light version of the list, but if you need access to the full list (approximately 70 entries), click on **this icon**, and the well-known **Edit Parameters** dialogue opens*

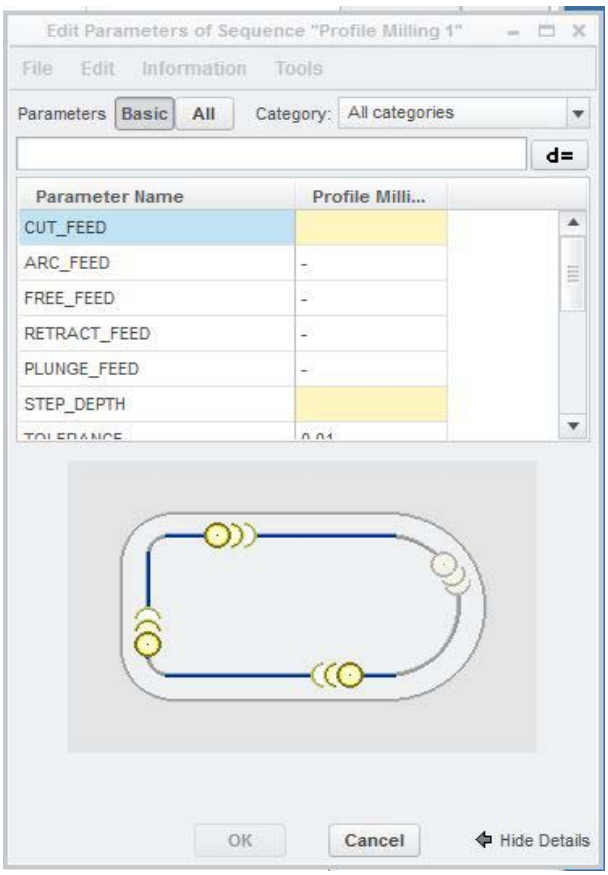

- In the **Param Tree window**, click with the mouse cursor in the field to the right of the text **CUT_-FEED** and type **75**

- Click with the mouse cursor in the field to the right of the text **STEP_DEPTH** and type **6**

- Click with the mouse cursor in the field to the right of the text **CLEAR_DIST** and type **2.5**

- Click with the mouse cursor in the field to the right of the text **SPINDLE_SPEED** and type **500**

- Click **OK** to save and exit

The last entry is theThe **Clearance** tab: *allowinging safe idle movements of the tool...*

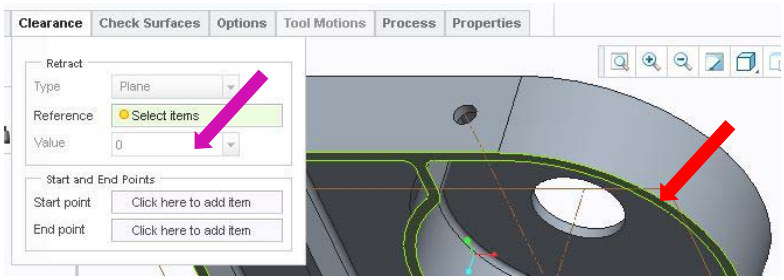

- Choose it, and for **Reference** choose the edge surface of the model
- For value, type **10**, *ensuring a safe 10 mm distance from tool tip to model when milling is on pause*

Now all the variables necessary for executing the **Profile Milling** have been defined. The **Tool Path** can be displayed:

- Click the **Display Tool Path** icon  in the **Profile Milling** dialogue
- Run **Play Path**

The system displays the tool path as shown

- Choose **Close** button from the PLAY PATH dialog

*Note: In a little while you will change this **NC Sequence** to give you a more optimal output. So **do not** exit yet with the ✓ **Accept button**.*

SPECIFYING STEP DEPTH

Use several different **Step Depth** values to profile the outside of the part.

1.Modify the **Step Depth** parameter to **25**.

- In the **Profile Milling** dialogue choose the **Parameters** tab
- In the list below change **Step Depth** from **6** to **25** and press Return

2. Play the tool path.

- Click the **Display Tool Path** icon
- Run **Play Path**
- Choose the **Close** button from the **PLAY PATH** dialog.

Step Depth 25

3. Now use a **step depth** of **100**.

- In the **Profile Milling** dialogue choose the **Parameters** tab
- In the list below change **Step Depth** from **25** to **100** and press Return

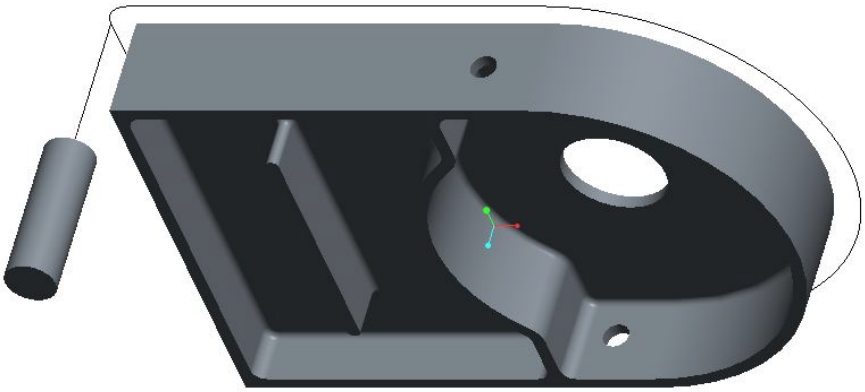

Step Depth 100

4. Play the tool path.

- Click the **Display Tool Path** icon
- Run **Play Path**
- Choose the **Close** button from the **PLAY PATH** dialog.

*Since the **Step Depth** is greater (in this case, much greater) than the depth of the part, the system generates a single pass at the bottom of the part (as defined by the height of the surfaces being profiled).*

LEAD IN & LEAD OUT

Add a **Lead In and Lead Out** to the current tool path. Also change the **Step Depth** again to see how this affects the **Lead In** and **Lead Out**.

1. Add **Lead In**, **Lead Out** and **Lead Radius**.

- Choose the **Parameters** tab - *The system displays the **Parameter** Setup window.....*
- in the bottom of the list, choose the **Edit Machining Parameters** icon 

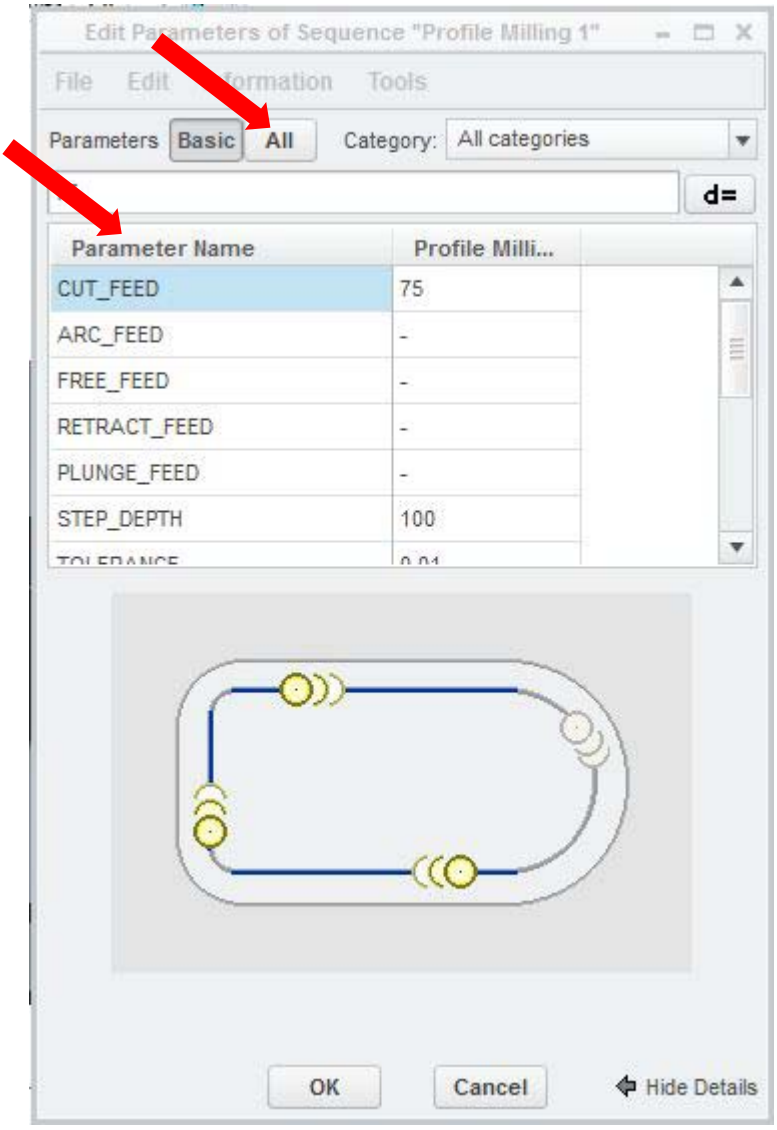

- Choose the **All** action button in the upper left corner of the **Parameter** Setup window

- Click once on the **parameter Name** to sort the list alphabetically

You will have to scroll down to the bottom of the list to find the settings you are about to change.....

- Click with the mouse cursor in the field to the right of the text **CUT_ENTRY_EXT** and choose **LEAD_IN** on the pull - down menu

- Click with the mouse cursor in the field to the right of the text **CUT_EXIT_EXT** and choose **LEAD_OUT** on the pull - down menu

- Click with the mouse cursor in the field to the right of the text **LEAD_RADIUS** and type **25**
- Exit from the **Parameter** Setup window by choosing **OK**

2. Play the tool path.

- Choose **Play Path** - **Screen Play** - **Play Forward**

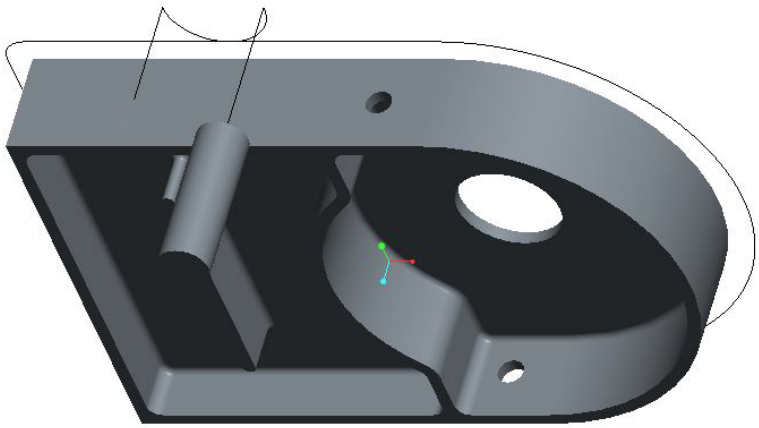

The system displays the tool path as shown to the left.
You may sometimes find that the point at which the tool enters and exits the material is different than shown here....

- Choose **Close** from the **Play Path** dialog

3.Set the **Step Depth** back to **6**, by re-entering the **Parameters** tab dialog.

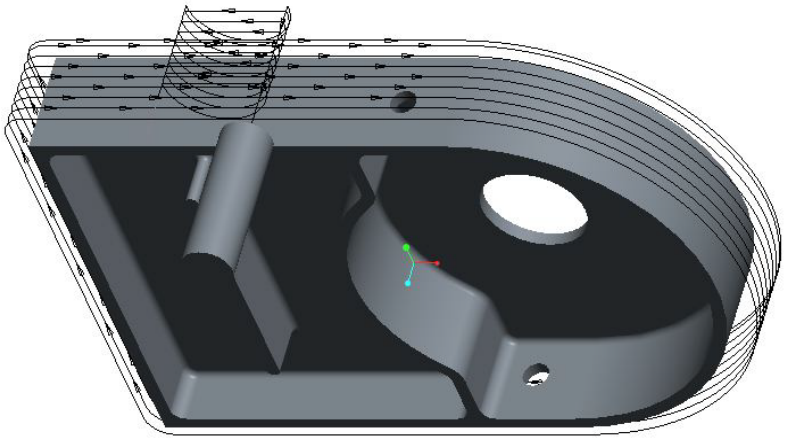

4. Play the updated tool path.

- Choose **Play Path** - **Screen Play** - **Play Forward**

*Notice that the **Lead In** and **Lead Out** are applied to each Cut Level.*

- Choose **Close** from the **Play Path** dialog

5. Set **Tangent_Lead_Step** to **25** and play updated path.

- Click with the mouse cursor in the field to the right of the text **TANGENT_LEAD_STEP** and type **25**. Close the **Parameter** Setup Dialogue box the usual way - with an **OK** in the bottom.

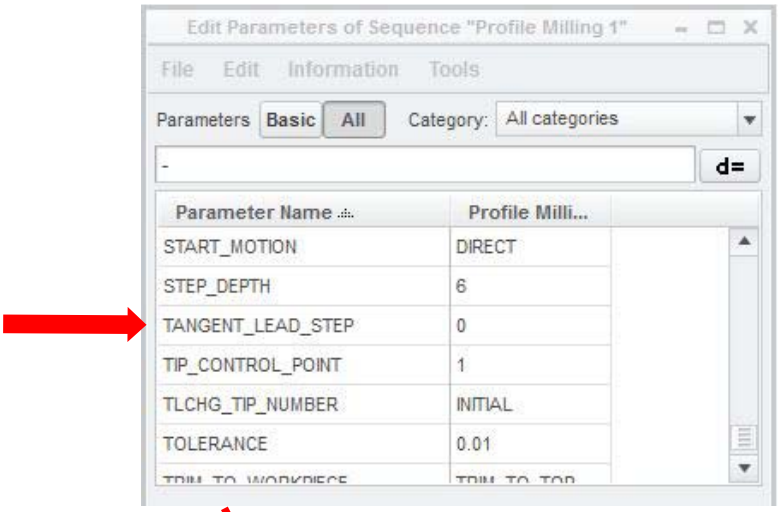

- Choose **Play Path** - **Screen Play** - **Play Forward**

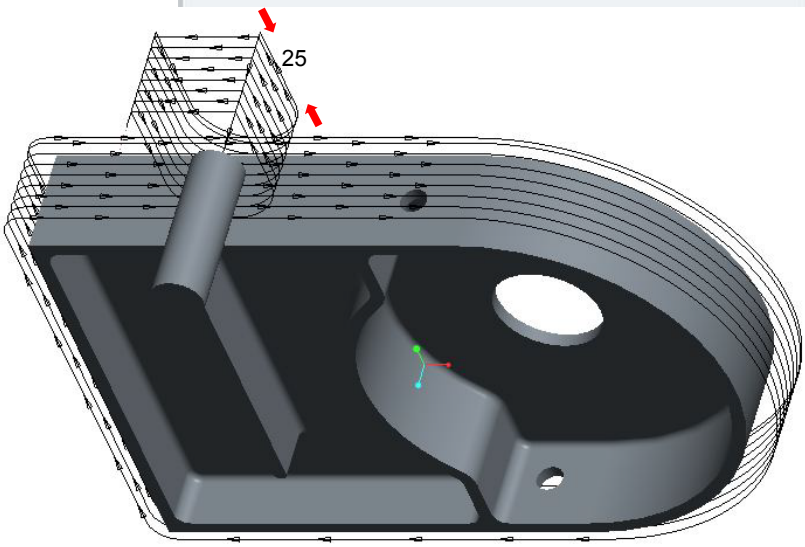

Tangent_Lead_Step with a value of 25

- Choose **Close** from the **Play Path** dialog

6. Set **Normal_Lead_Step** to **20**, and play updated path.

- Click with the mouse cursor in the field to the right of the text **NORMAL_LEAD_STEP** and type **20**. Close the **Parameter Setup** Dialogue box with an **OK** in the bottom.

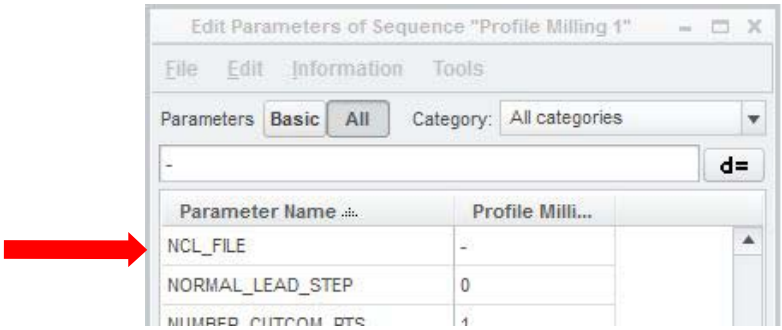

- Choose **Play Path** - **Screen Play** - **Play Forward**

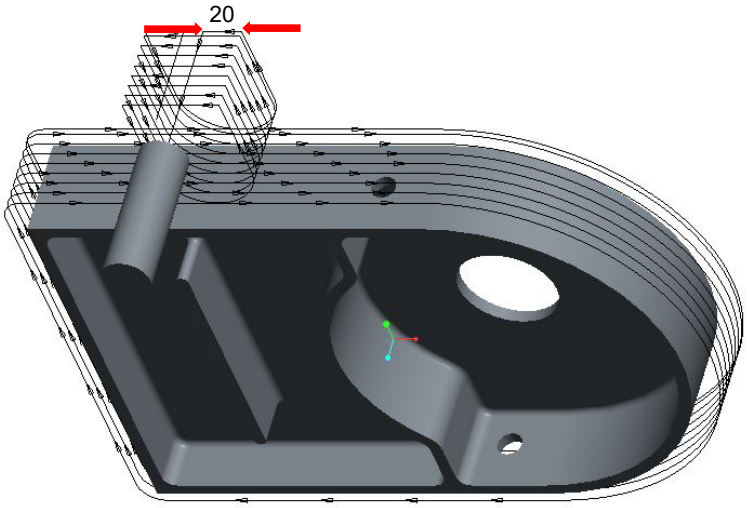

Normal_Lead_Step
*with a value of **20***

- Choose **Close** from the **Play Path** dialog

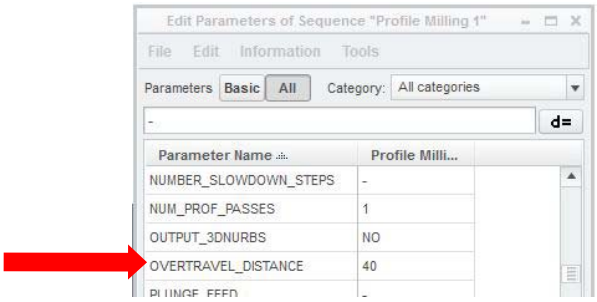

7. Set **Overtravel_Distance** to **40** and play updated path.

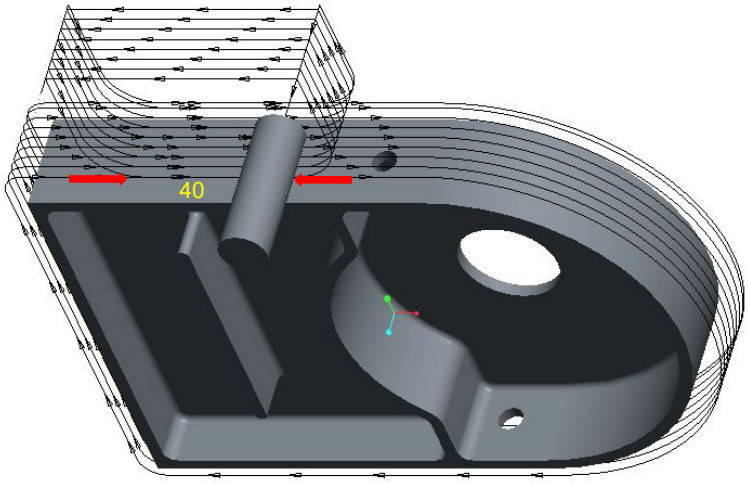

Overtravel_Distance-
with a value of 40

You may want to spend some time trying out differe
combinations of the above parameters.

- Save your work**: Choose File > Save as > Save a backup.** Use **Organize,** and create a new folder. This action puts all the files necessary for running a machining simulation in this folder and enables you at a later time to view or continue your work .
- The folder must be handed in to the 41617 home page > **Assignments > Cam Week 2**, following instructions here.

ATTENTION
The final step of the above exercise must be **REVIEWED** and **APPROVED** by your **INSTRUCTOR** to make you eligible for a signature on your approval sheet confirming your successful completion of this tutorial.

Leave this file open and continue to the next exercises. Please complete the remaining two *Day-2* exercises (*Manipulating a Mill Path & Optimizing Regions*) before requesting review and approval.

PART 4: MANIPULATING A MILL PATH

SCAN TYPE

Using the provided manufacturing model, try several scan types to rough the electrode (shown below) out of a block of graphite..

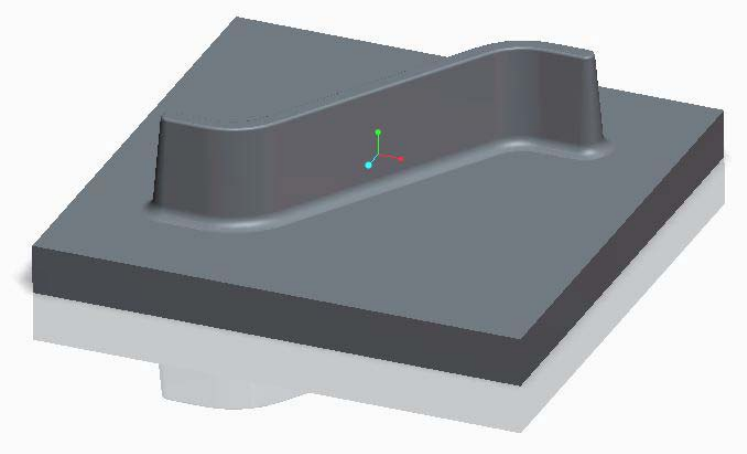

1. Open the manufacturing model called: **vol5.asm**

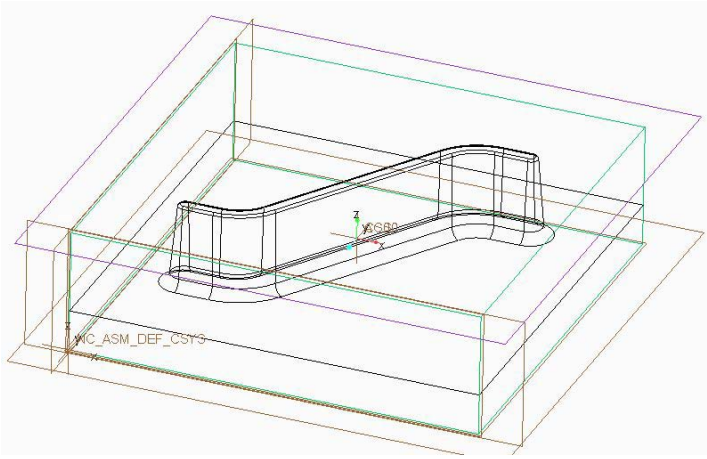

2. Proceed ahead to where you can play the path using the default scan type of **TYPE_1.**

- On the Model Tree, find **Classic Volume Milling(OP010)**, click it and choose **Play path**

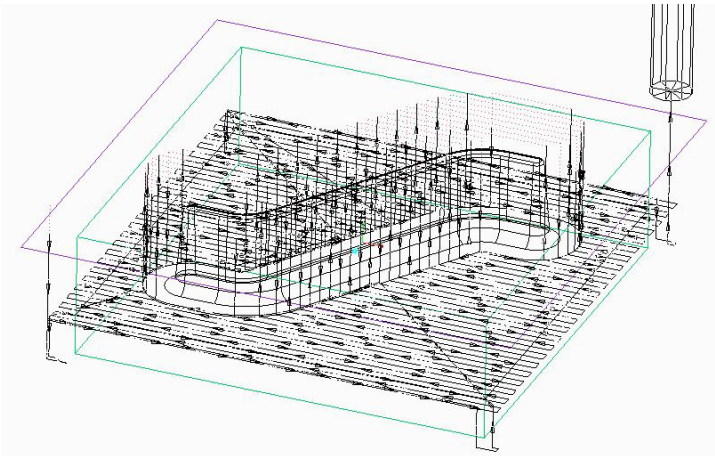

*The NC Sequence was pre-programmed to run with **Scan Type 1***

3. Change the scan type to **TYPE_2.**

- Close the Player
- On the Model Tree, find **Classic Volume Milling(OP010)**, click it again and choose **Edit Definition.** *See next page...*

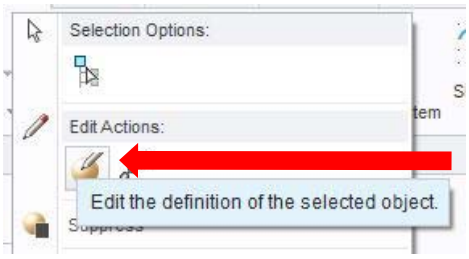

***Click** the ball...and the **Menu Manager** appears in the upper right corner of the screen*

- Choose **Seq Setup**- *The **Seq setup** "wishing list" appears*
- Choose **Parameters** on the list or use to open the **Edit Parameters** dialoque box
- Click with the mouse cursor in the field to the right of the text **SCAN_TYPE** and Click on **TYPE_2**
- Exit the **Parameter Setup** window with an *OK*

5. Play the tool path.

- Choose Play Path - Screen Play - Play Forward

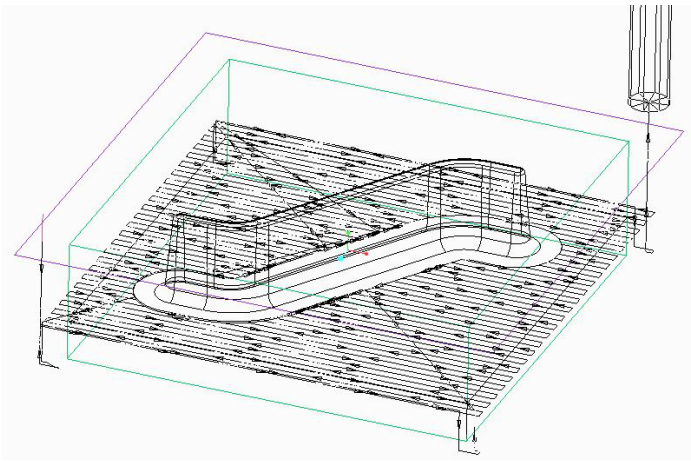

*The NC Sequence running with **Scan Type 2***

6. Change the scan type to **TYPE_3.**

- Choose
- Click with the mouse cursor in the field to the right of the text **SCAN_TYPE** and Click on **TYPE_3**
- Exit the **Parameter Setup** window

7. Play the tool path.

- Choose **Play Path - Screen Play - Play Forward**

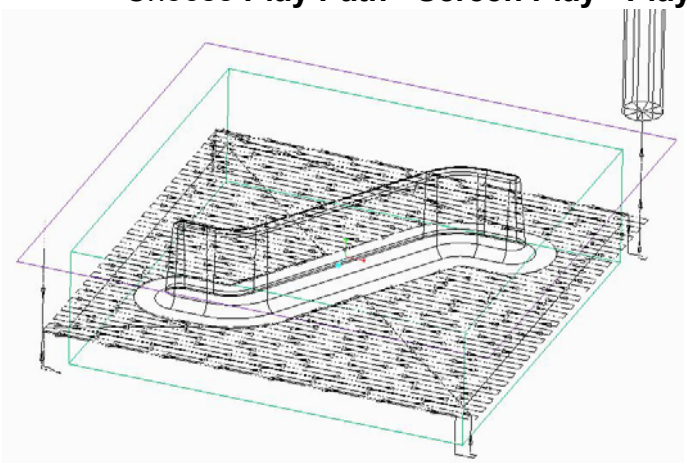

*The NC Sequence running with **Scan Type 3***

8. Change the scan type to **TYPE_SPIRAL**

- Choose
- Click with the mouse cursor in the field to the right of the text **SCAN_TYPE** and Click on **TYPE_SPIRAL**

- Exit the **Parameter Setup** window

9. Play the tool path.

- Choose **Play Path - Screen Play - Play Forward**

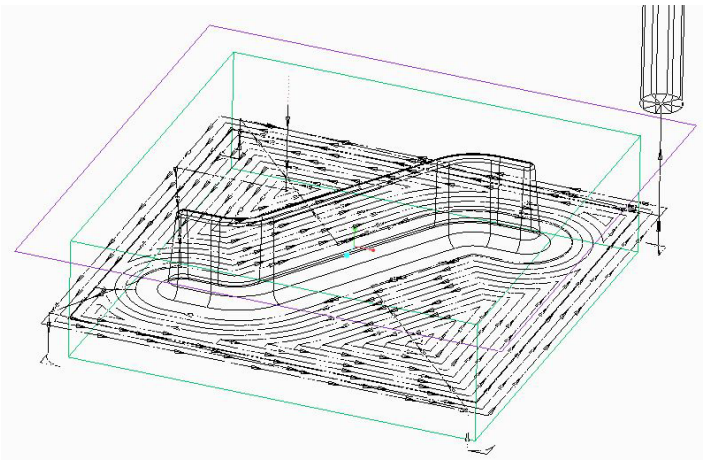

*The NC Sequence runnig with **Scan Type SPIRAL***

10. Change the scan type to **TYPE_ONE_DIR.**

11. Play the tool path.

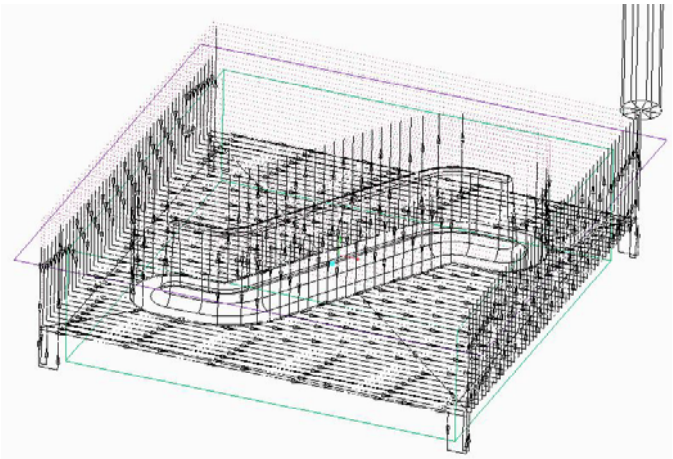

*The NC Sequence runnig with **Scan Type ONE DIRECTION***

12. Change the scan type to **TYPE_1_CONNECT**.

13. Play the tool path.

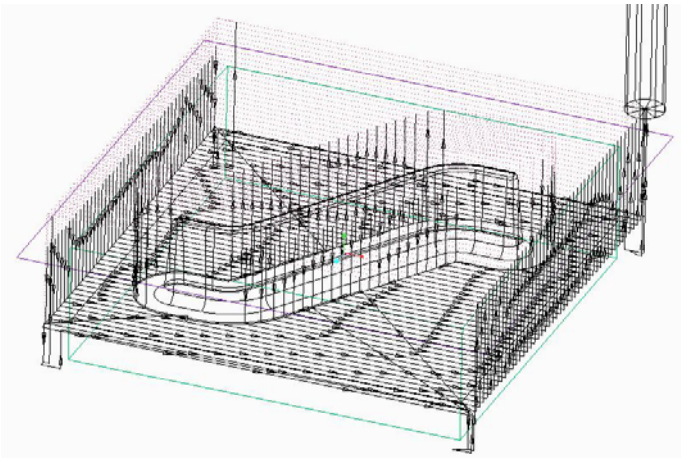

*The NC Sequence running with **Scan Type 1_CONNECT***

APPROACH WALL

Specify approach walls to machine the part using scan types **TYPE_2** and **TYPE_ONE_DIR.**

1. Change back to scan type **TYPE_2.**

2. Play the path..

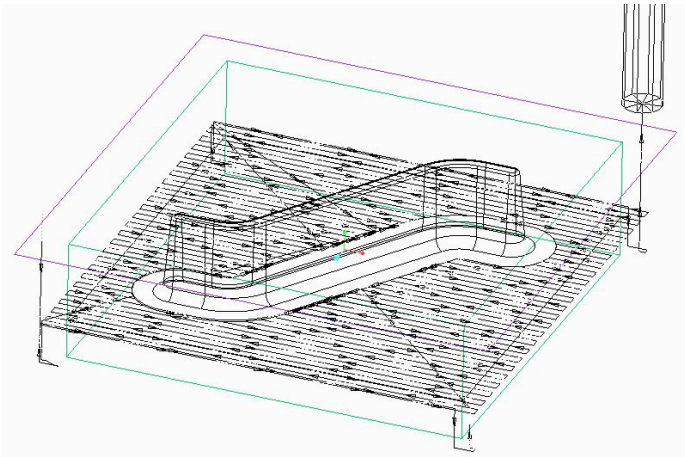

*The NC Sequence runnig with **Scan Type 2***

3. Define an **Approach Wall** on the left side of the volume.

- Choose **Seq Setup** from the **NC SEQUENCE** menu
- In the **Seq Setup** "wishing list" Choose **Appr Walls**
- Choose **Done**
- Select the left edge of the milling window as shown below

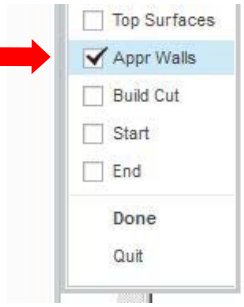

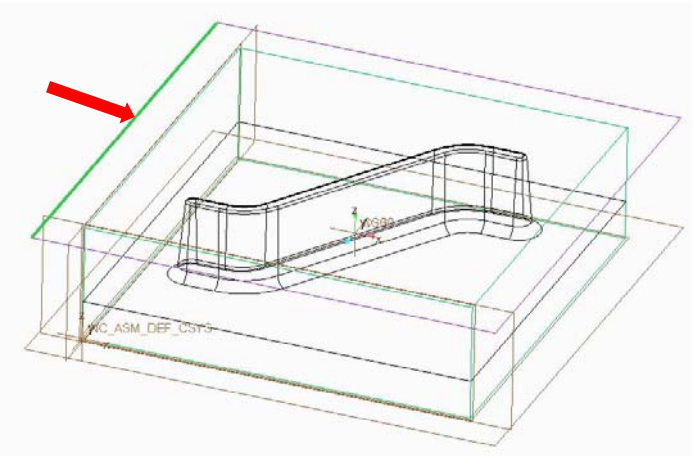

***Approaching wall** chosen*

- Choose **OK in the Select** dialogue
- Choose **Done**

4. Play the path.

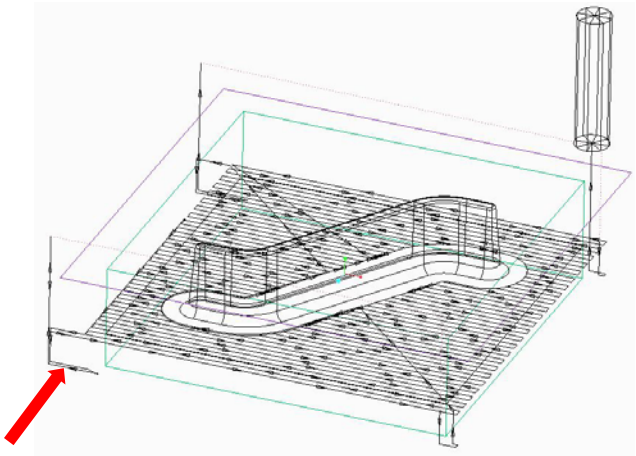

The arrow indicates where the tool passes through the approaching wall

5. Change the scan type to **TYPE_ONE_DIR**

- Choose 
- Click with the mouse cursor in the field to the right of the text **SCAN_TYPE** and click on **TYPE_ONE_DIR**
- Exit the **Parameter Setup** window

6. Add another approach wall.

- Choose **Seq Setup**
- Choose **Appr Walls**
- Choose **Done**
- Select the right edge of the milling window as shown below

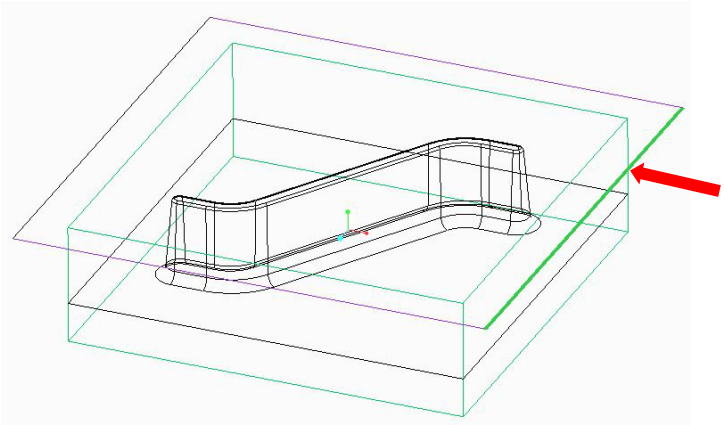

- Choose **OK in the Select** dialogue
- Choose **Done**

7. Play the path.

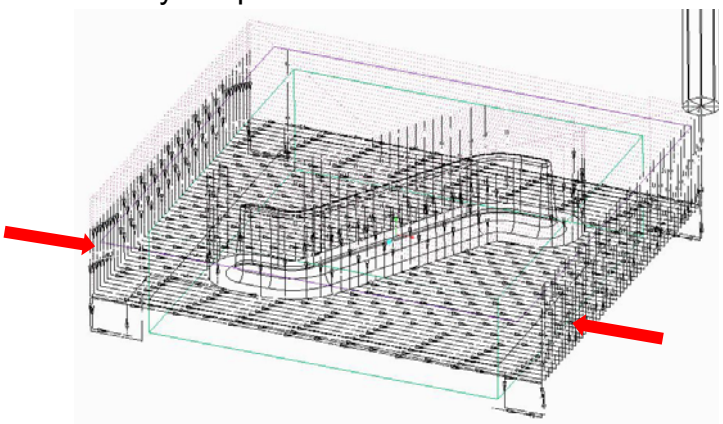

The tool passes through both the left and the right approaching wall

MODIFYING A VOLUME

Remove a block of material from the volume and replay the path.

1. Modify the milling window to remove the material.

- Choose **Seq Setup**
- In the **Seq Setup** "wishing list" Choose **Window**
- Choose **Done**
- Choose **Redef Wind** *- On the top menu, these icons will now appear:*

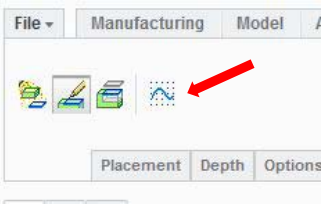

- Choose the one to the right:  (***Edit Internal Sketch***)

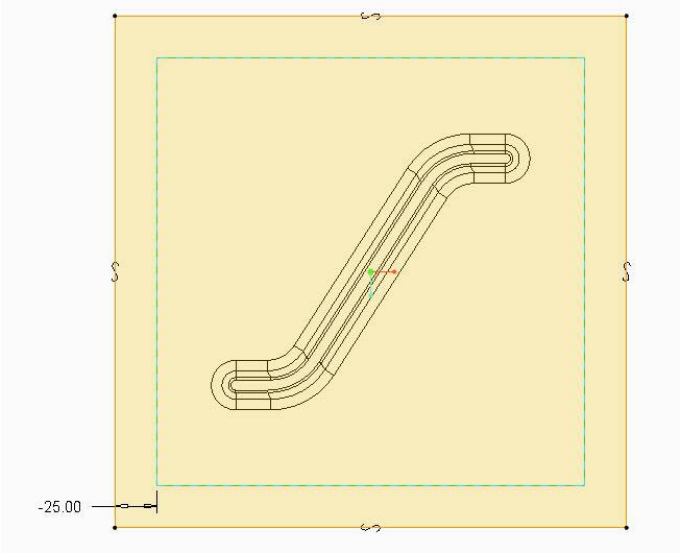

*The **Sketcher** opens and is ready for input. It may appear mirrored to this.*

- Using familiar tools, edit the sketch so it appears like this:

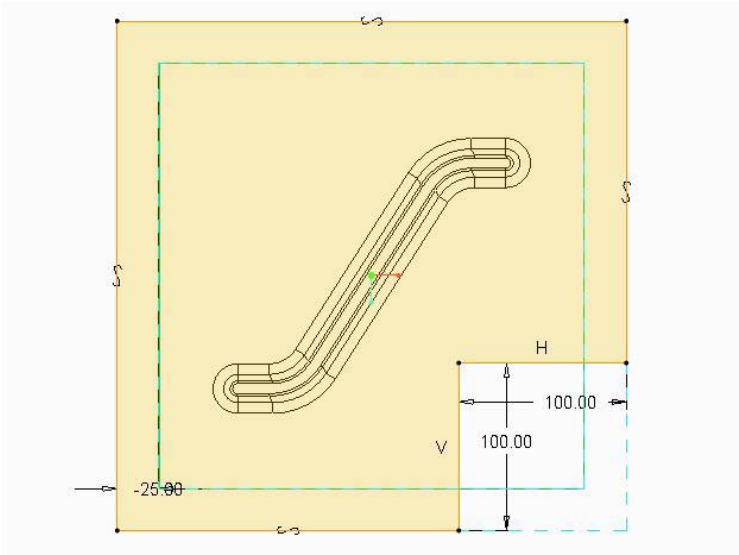

- Click the green OK button in the **Sketcher** tab followed by the green OK button when sketch editing is finished:

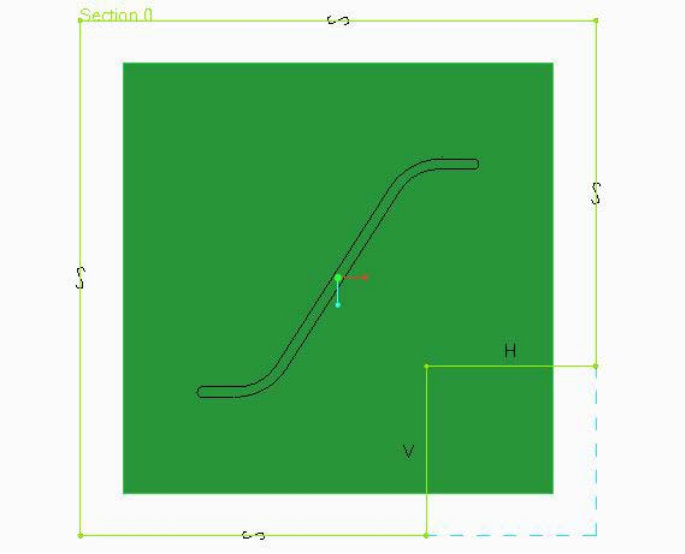

The original sketch vs. the changed one (Thin green line)

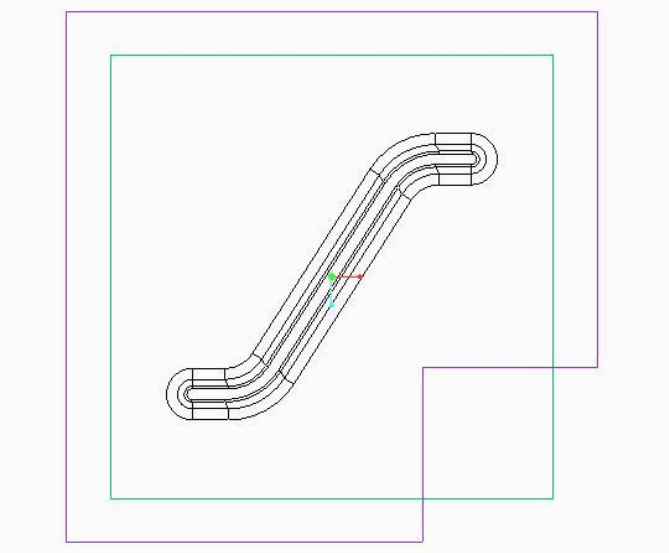

*The revised **Milling Window** - How will it affect the actual milling?*

2. Rotate the view to a 3D appearance.
3. Change back to scan type **TYPE_1.**
4. Regenerate the model using **CTRL + G**
4. Play the Path.

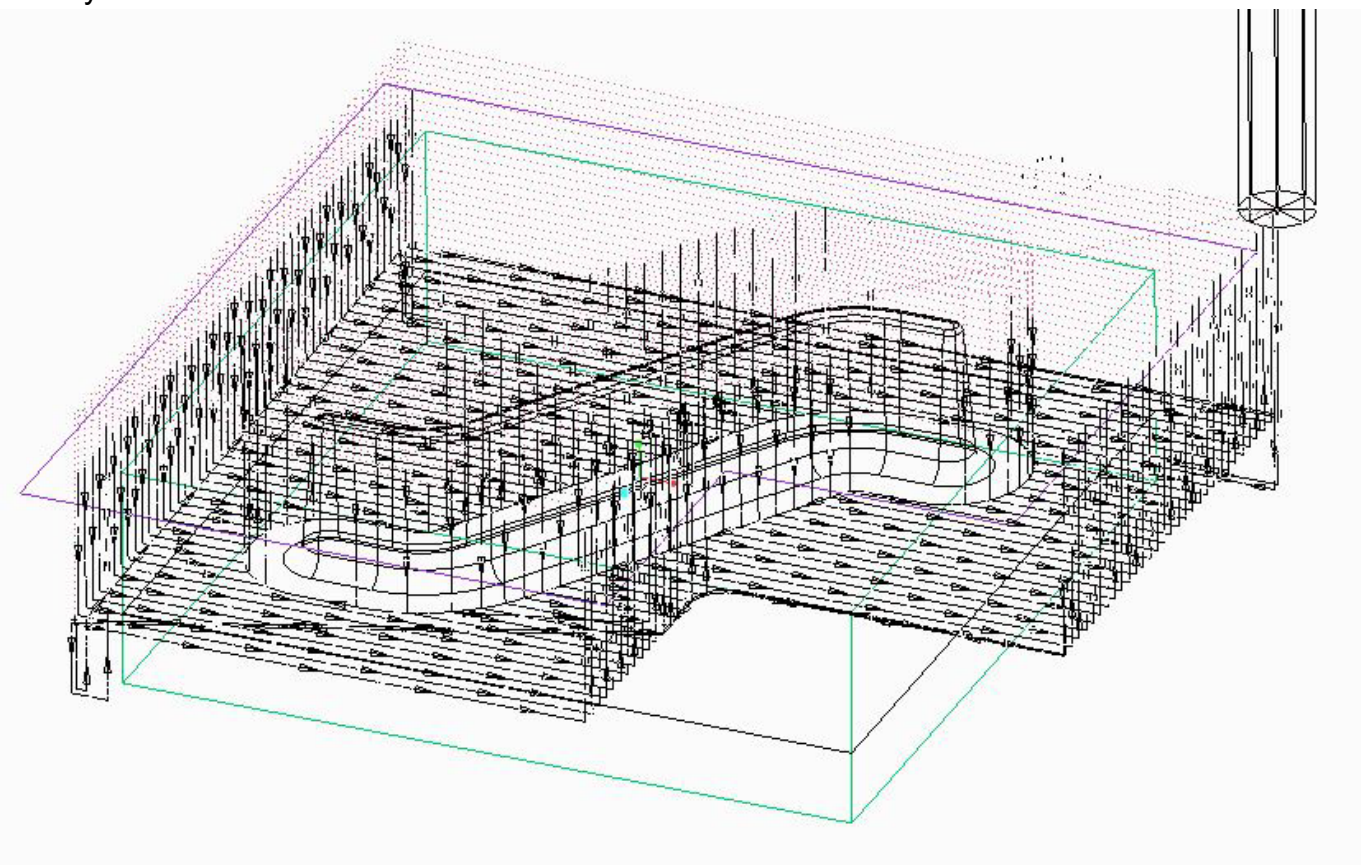

● Save your work**: Choose File > Save as > Save a backup.** Use **Organize,** and create a new folder. This action puts all the files necessary for running a machining simulation in this folder and enables you at a later time to view or continue your work .

● The folder must be handed in to the 41617 home page > **Assignments > Cam Week 2**, following instructions here.

OPTIMIZING REGIONS

Generate a tool path to machine the inside of the support bracket shown below. Reorder the regions to force the system to process each one individually.

1. Open the manufacturing model called: **vol6.asm**
2. Skip ahead to where you can play the path using the default scan type of **TYPE_1**.
   - In the **Model Tree**, Right-click on "***1. Classic Volume Milling [OP010]***" and choose **Edit the Definition**
   - In the **Menu Manager**, Choose **Play Part / Screen Play**

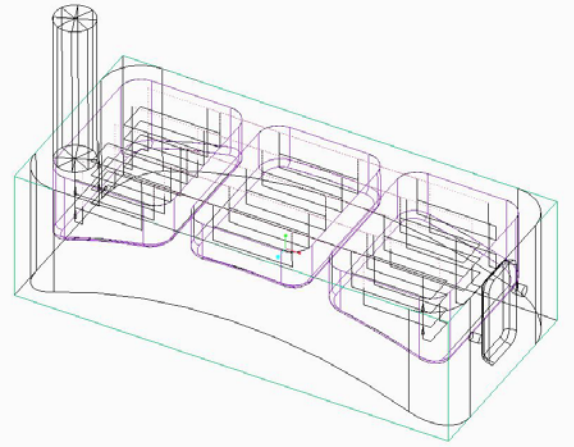

*The result would look approximately like this. Please notice that the tool cuts a slice in the left pocket, jumps over the cross wall, cuts a slice in the middle pocket, jumps again and cuts in the right pocket. The process is then repeated one level deeper, and so on, gradually carving all three pockets "**by Slices**". This is one of two basic methods of cutting. The alternative one is "**by Regions**", where each hole (**Region**) is cut from top to bottom before moving on to the next.*

4. Add a new path driven by **Regions** (and not slices). The current path will still remain and will be dealt with later.
   - Choose **Customize**

*The system displays the **Customize** dialog and the **CL Data window** as shown below. The **CL Data window** contains the cutter information for the tool path that was just completed. The **CL Data window** sometimes hides behind the graphics window*

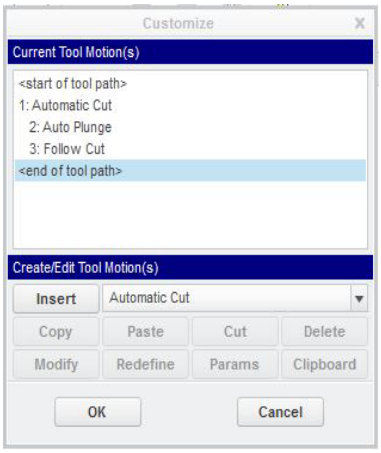

*The **Customize dialogue** box and the **CL**(Cutter Location data)info box*

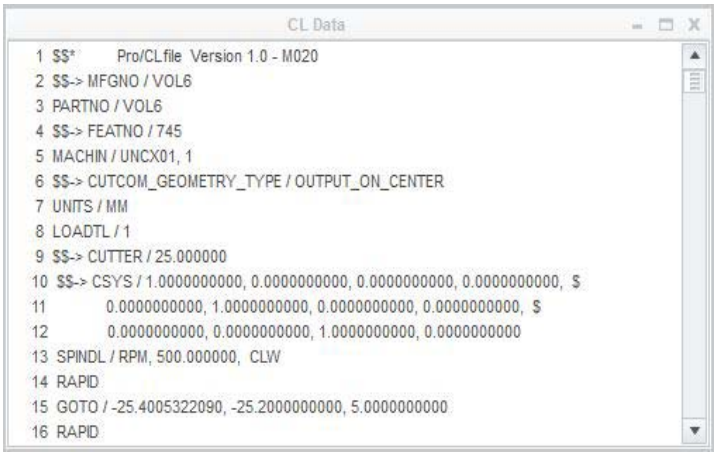

When you wil have completed the following section there will be multiple cutter paths machining the same areas. In a later section you will learn how to delete the unwanted cutter paths and keep only the one you want.

- In the **Customize** box choose the **Insert** action button
- In the **VOL/PROF CUT** menu choose **Automatic**
- Choose **Done**
- Choose **Build Cut** - *and verify that "**By Region**" is **active***
- Choose **Order Regions** - *which allows you to point out which hole to dig first*
- Choose **Done Order**
- Choose **Done/Return**
- Choose **Done Cut** - *You will now notice that that the listings in the **customize** box grew from **4** to **7**. (You just added 3). Unfortunately they are not renameable, but you can choose them one by one and see their influence of the cutter path*
- Exit the **Customize** box with an **OK**

5. **Repaint** the screen.

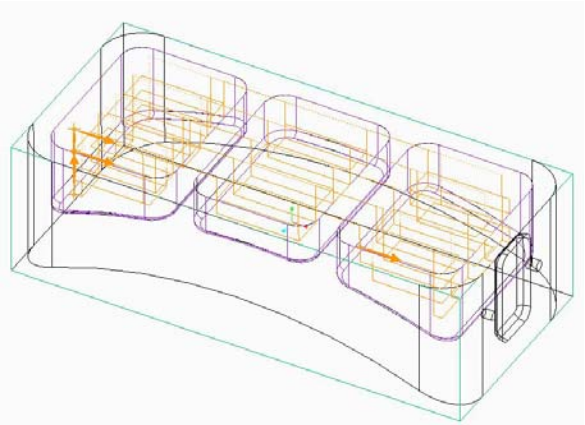

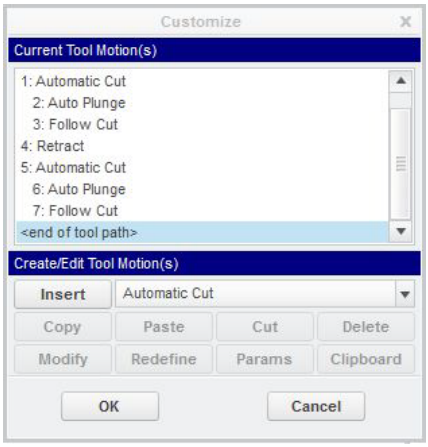

6. Play the cut.

- Choose **Play Path**

The new optimized cutter path is displayed on top of the existing cutter path as shown below.

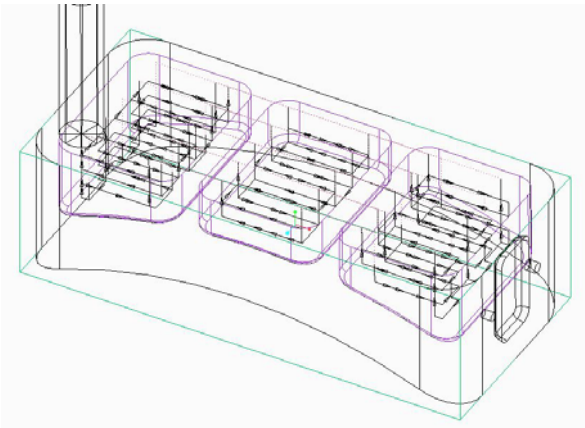

*If it is hard to notice the difference from before, you may use the **NC Check** option*

7. Now it would be convenient to remove the original cutter path so double cutting is avoided:

- Choose **Customize**
- In the **Customize** box take a look once again:

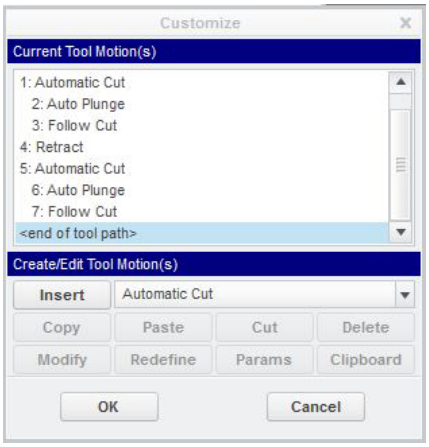

*The **Customize** dialog lists the Current **Tool Motions** that have been created. These consist of the original tool motion, plus the customized tool motion that ordered the regions to be cut. Now you will learn how to delete the paths you do not want to keep.*

- Choose the top line: ***1:Automatic Cut***
- Press *SHIFT* and Choose ***2: Auto Plunge***, ***3: Follow Cut*** and ***4: Retract***. (*4 lines selected)*
- Choose **Delete**, and accept **Confirm deletion** in the **Confirm** box
- Exit the **Customize** box with an **OK**

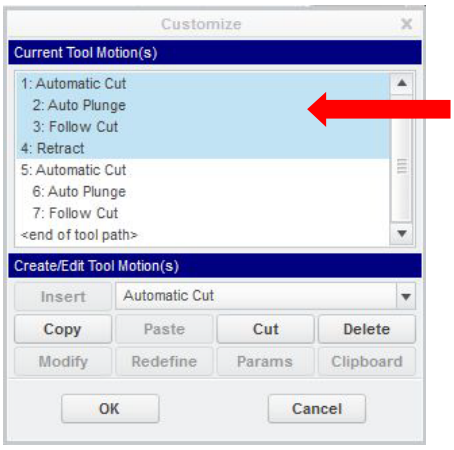

Away they go...

8. Repaint the screen and play the tool path.

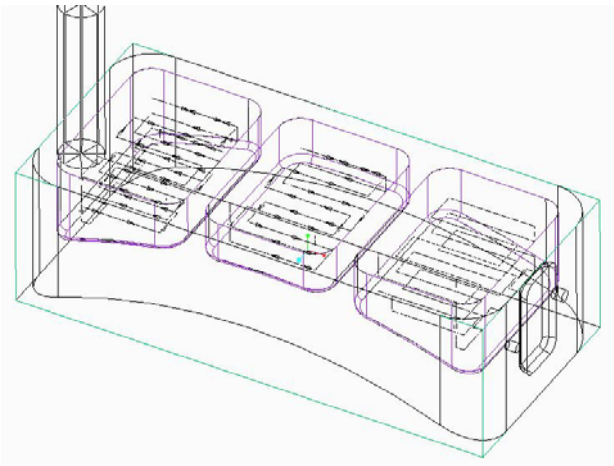

9. Now, force the system to cut the pocket all the way to left first, then the middle pocket, then the right pocket.

- Choose **Customize**
- In the **Customize** box, choose **1: Automatic Cut**
- Click **Redefine**
- In the **Menu Manager** choose **Build Cut**
- Choose **Order Regions** - *The **Regions** on the Screen appear as blue (Red?) rectangles*

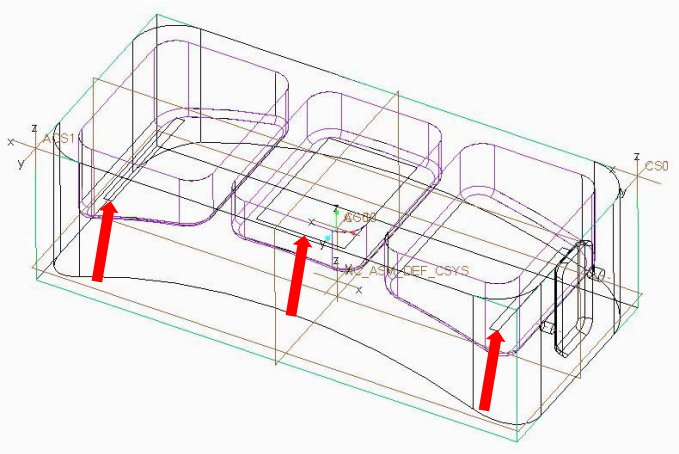

*the rectangles indicate **Regions***

- Select the region which lies at the bottom of the pocket which is farthest to the left of the part

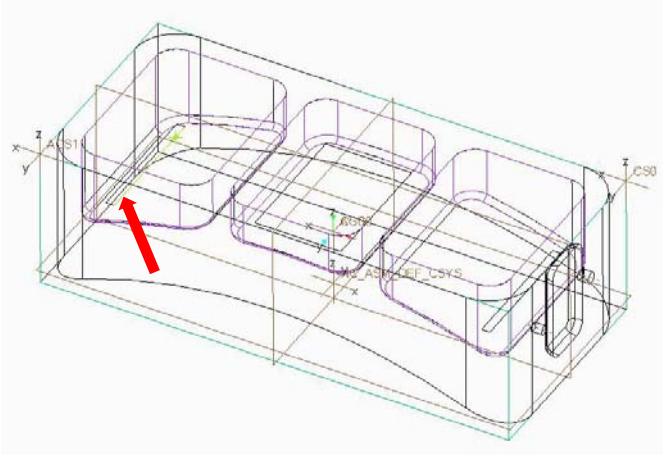

*This one...It will pre-highlight in **green(?)** and then gets dark when selected*

- Select the middle region

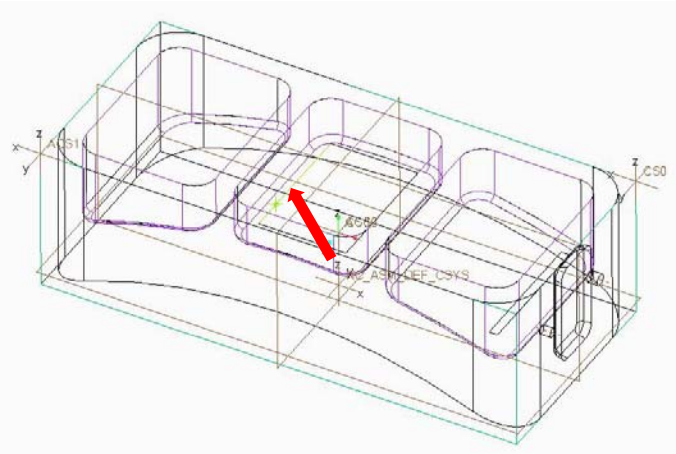

Then this one...You will notice that you do not have to select the last region...the system assumes that it is last.

- Choose **Done/Return**
- Choose **Done cut**
- Exit the **Customize** box with an OK

10. Play the cut.

- Choose **Play Path**

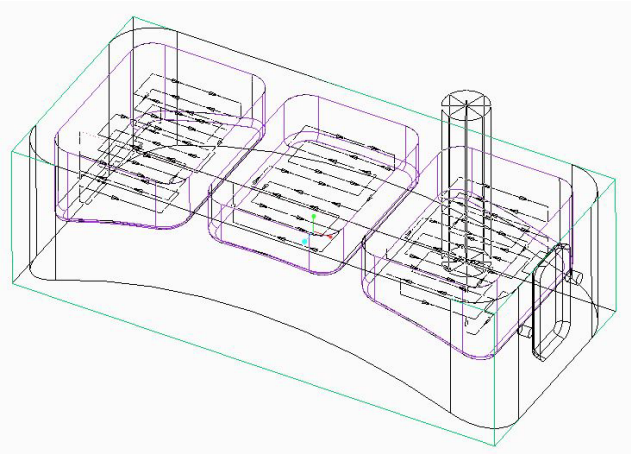

11. Return to the main menu, close and erase all files. *Or, do the **saveas/backup** for your own future use*.

MULTIPLE CUTS

When you generated the tool path in the last section and optimized the regions, you may have noticed that the cut angle used to machine down into the pockets did not really generate the most effective path. You are going to fix this problem in this Demonstration. Create two **Cut Motions** for the tool path you worked with in the previous section. You can then change the **CUT_ANGLE** for the regions in both **Cut Motions** to a more efficient angle and adjust how much the tool cuts in each motion. The **NC Sequence** is provided for you in the manufacturing file.

1. **Reopen** the manufacturing part: **vol6.asm.**

2. Activate the existing **NC Sequence.**

- In the **Model Tree**, Right-click on "***1. Classic Volume Milling [OP010]***" and choose **Edit the Definition**
- In the **Menu Manager**, Choose **Play Part / Screen Play** *When watching, you will notice that the tool runs **Slices** (Yes, no **Regions**) in a uniform thickness (10 mm) each, all the way from top to bottom of the cavities.*
- In the **Menu Manager** Choose **Customize**. *You will now empty the content in the **Tool Manger**:*
- Press *SHIFT* and choose ***1: Automatic Cut*** - *3 lines will be selected automatically*
- Choose **Delete**, and accept **Confirm Deletion** in the **Confirm** box - *The box is now completely empty and if you ran **Play Path** nothing would happen...*
- Press the **Insert** button
- In the **Menu Manager** Choose **From-To-Depth**:- *You are about to create the first of two **cutting motions**, each in their own seperate height range.*
- Choose **Done**
- Choose **From Depth**
- Choose **Specify Plane**
- **Rightclick**, maybe repeatedly, until you pick the top surface of the part (**Feature 6** on the workpiece) as shown. Accept by left-clicking.

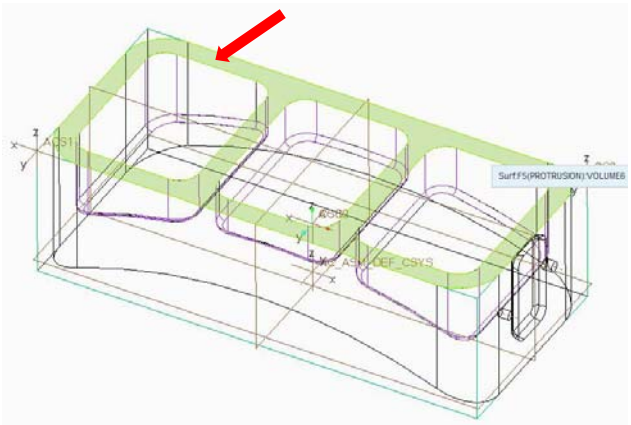

- Choose **To Depth**
- Choose **Z Depth**
- In the **Enter Height** box type **-20** and hit *ENTER* - *A Datum plane appears in the specified level to display the Tool Path depth*
- Choose **Parameters**
- In the **Edit Parameters** box, locate the **Cut Angle** entry and change it from **0 degrees** to **45 degrees** - Leave the box with an OK - *45 degrees is not optimal, but is chosen here for clarity*
- In the **Menu Manager**, Choose **Done Cut**
- Exit the **Customize** box with an **OK**
- Run **Play Path** to study the new tool motion

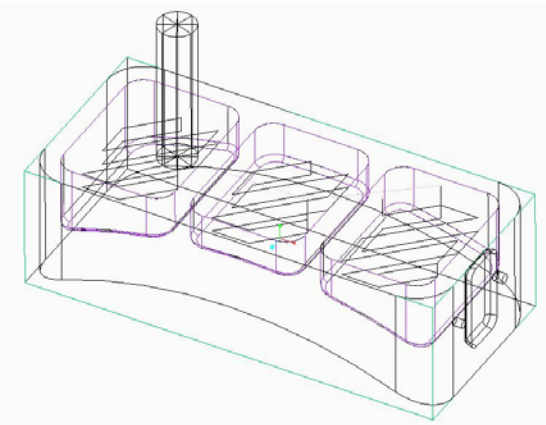

*The first 20 mm from the top and downwards have been milled. The parameters of this **tool motion** can be adjusted via the **Model Tree** at a later time*

Now you will define the second, lower level **Tool Motion**:

- Choose **Customize**
- Press the **Insert** button
- In the **Menu Manager** Choose **From-To-Depth**
- Choose **Done**
- Choose **From Depth**
- Choose **Z Depth**
- In the **Enter Height** box type **-20** and hit *ENTER*
- Choose **To Depth**
- On the Model, choose the **NC_ASM_TOP** Datum plane (in bottom of the model) - *Yes, this Z-depth is more than enough...*

The new **Tool Path** will now get its own unique parameters:

- In the **Menu Manager** Choose **Parameters**
- In the **Edit Parameters** box, change the **Step Depth** from **10** mm to **2** mm and the **Cut Angle** from **0** degrees to **90** degrees - Leave the box with an **OK**
- In the **Menu Manager** Choose **Done Cut**
- Exit the **Customize** box with an **OK**
- Run **Play Path** to study the two tool motions

*The two **Tool Motions** are easily distinguished from each other*

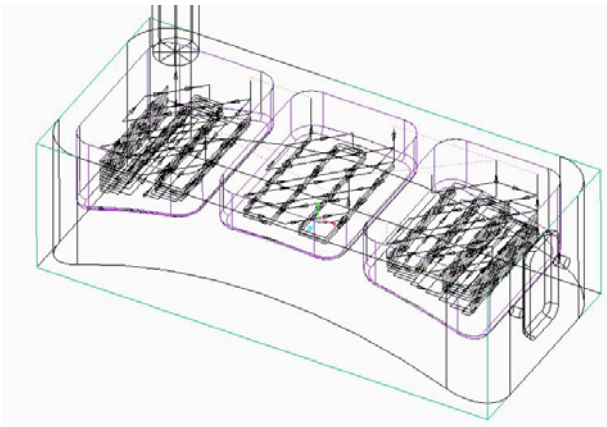

You have now created an optimized and efficient tool path. In a later Lesson, you will learn how to use more ***Customize*** *options to specify even more control over a tool path.*

11. ● Save your work**: Choose File > Save as > Save a backup.** Use **Organize,** and create a new folder. This action puts all the files necessary for running a machining simulation in this folder and enables you at a later time to view or continue your work .
    ● The folder must be handed in to the 41617 home page > **Assignments > Cam Week 2**, following instructions here.

End of demonstration 

Machine the pocket areas of the aircraft door bracket shown below.

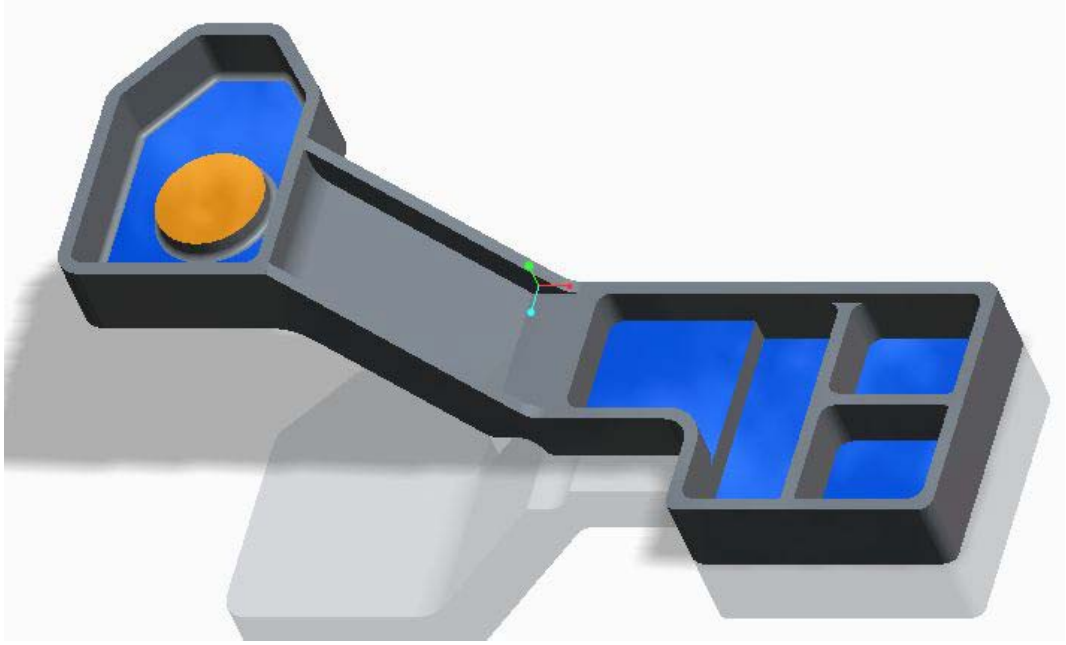

1. **open** the manufacturing model called: **vol7.asm**

2. Skip ahead to where you can play the path using the default scan type of **TYPE_1**.
    ● In the **Model Tree**, Right-click on "***1. Classic Volume Milling [OP010]***" and choose **Edit Definition**
    ● In the Menu Manager Choose **Play Path**.
3. Zoom up on the left end of the part.

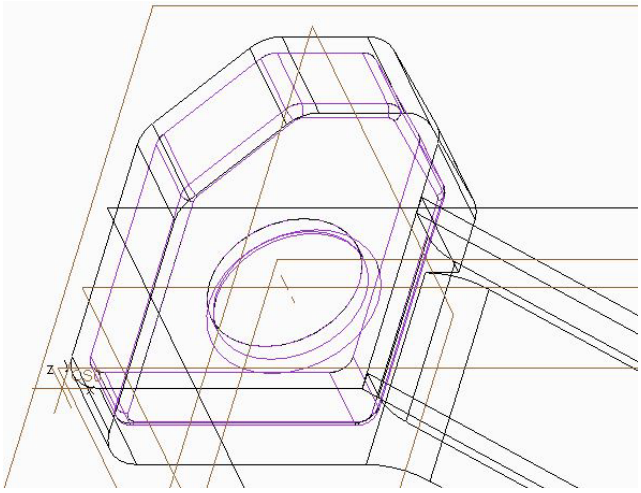

4. Play the path.

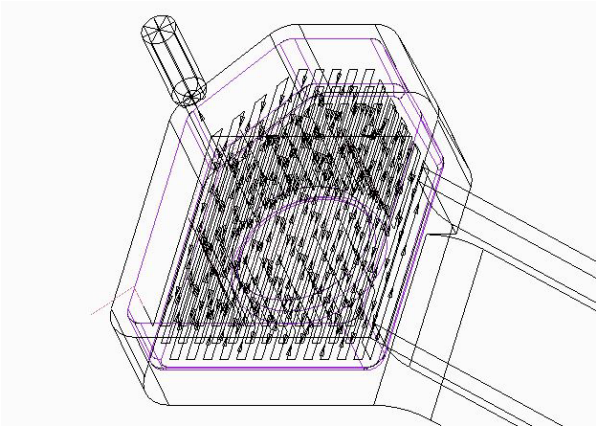

5. Open the **Edit Parameters** dialogue and change the scan type to **TYPE_SPIRAL**

6. Play the path.

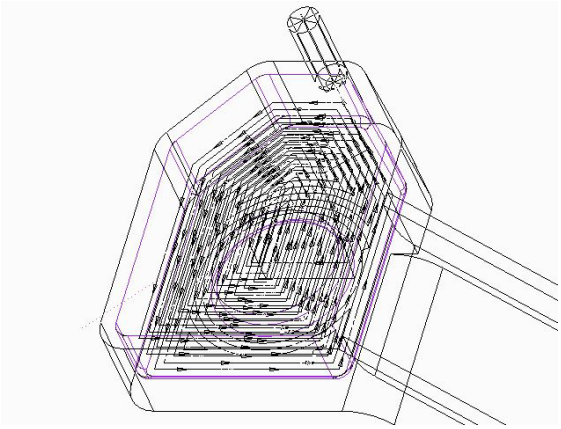

Which is the more efficient path?

Machine the pocket areas of the aircraft door bracket shown below

7. Zoom up on the other end of the part.

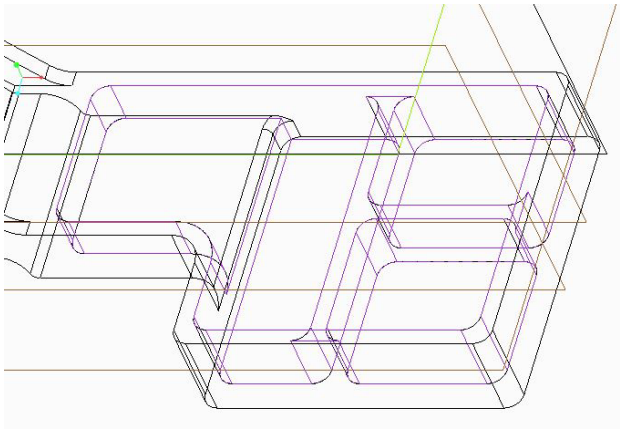

8. Use the other existing volume milling sequence.
   - In the Model Tree, click on "***2. Classic Volume Milling [OP010]***" and choose **Edit Definition**

9. Play the path.

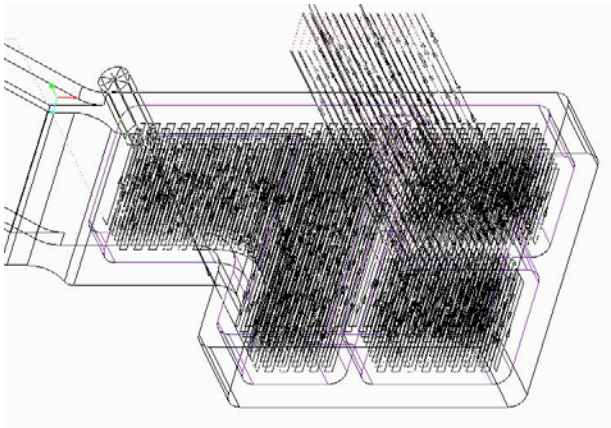

10. **Reorder** the regions to remove all of the retracts.

- Choose **Customize**

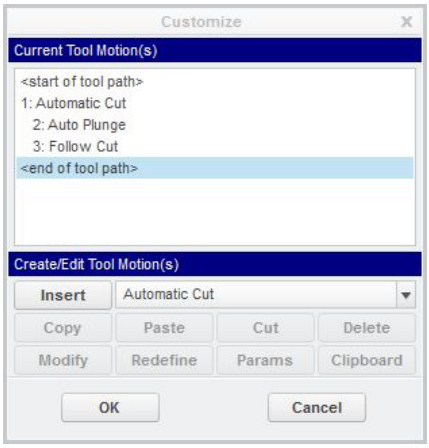

*The system displays the **Customize dialog** with the current tool motion shown on the list. You will create a new tool motion and then delete the one shown.*

- Choose the **Insert** action button
- Choose **Automatic**
- Choose **Done**
- Choose **Build Cut**
- Choose **By Region** *- Yes, no response...until later*
- Choose **Confirm**
- Choose **Order Regions**
- Select the largest region which lies near the top of the pocket

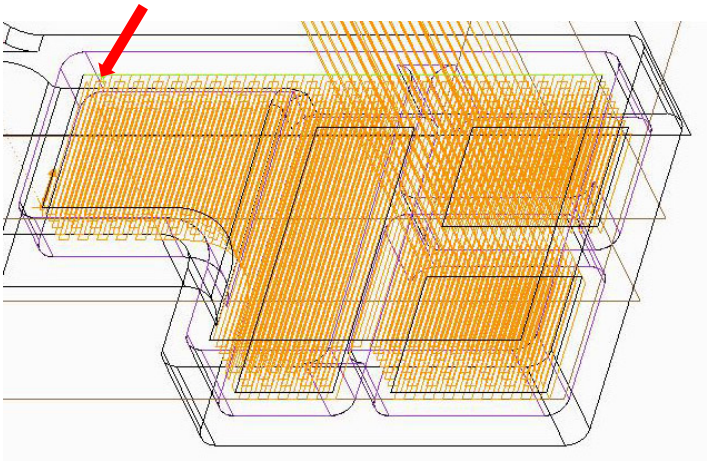

- Select the region which lies at the bottom of the pocket which is farthest to the left of the part

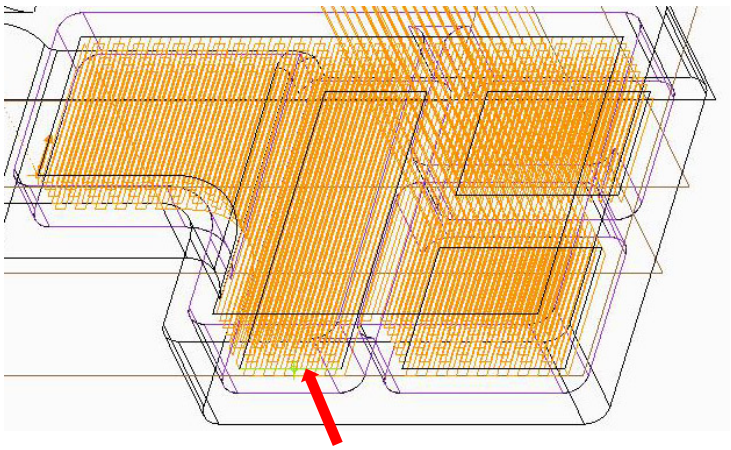

- Select the region at the bottom of the upper right pocket

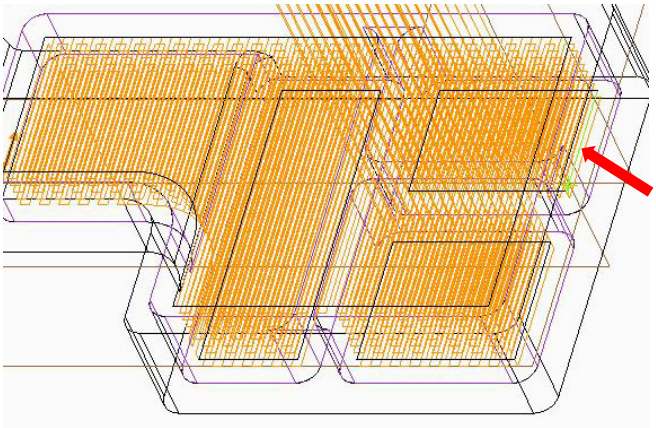

11. Play the cut.

- Choose **Play Cut**

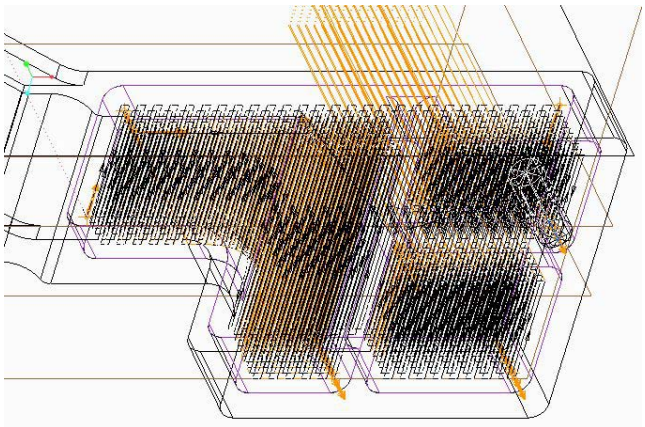

- Choose **Done**
- Choose **Done/Return**
- Choose **Done Cut**

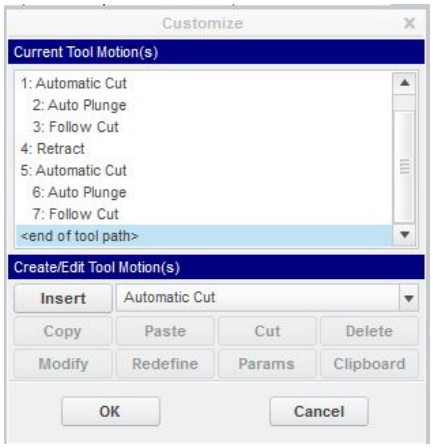

*The system now displays the **Customize** dialog with all the tool motions listed. You want to keep only the optimized tool motion you just created....*

12. Delete the **tool motion** you do not want and exit out of the **Customize** dialog.

- Highlight the first four numbered items on the list as shown by holding down the *CTRL* key on the keyboard and selecting each item with the mouse cursor

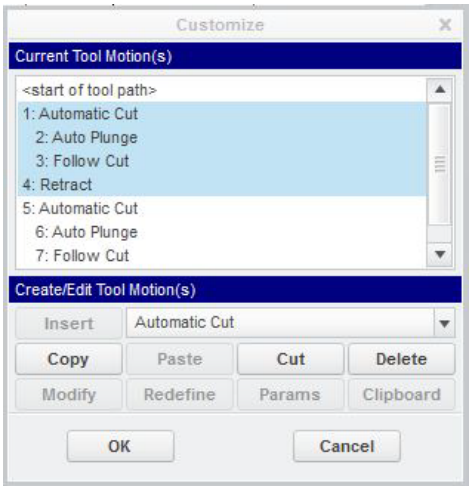

- Choose the **Delete** action button
- Choose **Yes** to confirm the deletion
- Choose **OK** from the Customize dialog
- Play the **Tool Path**

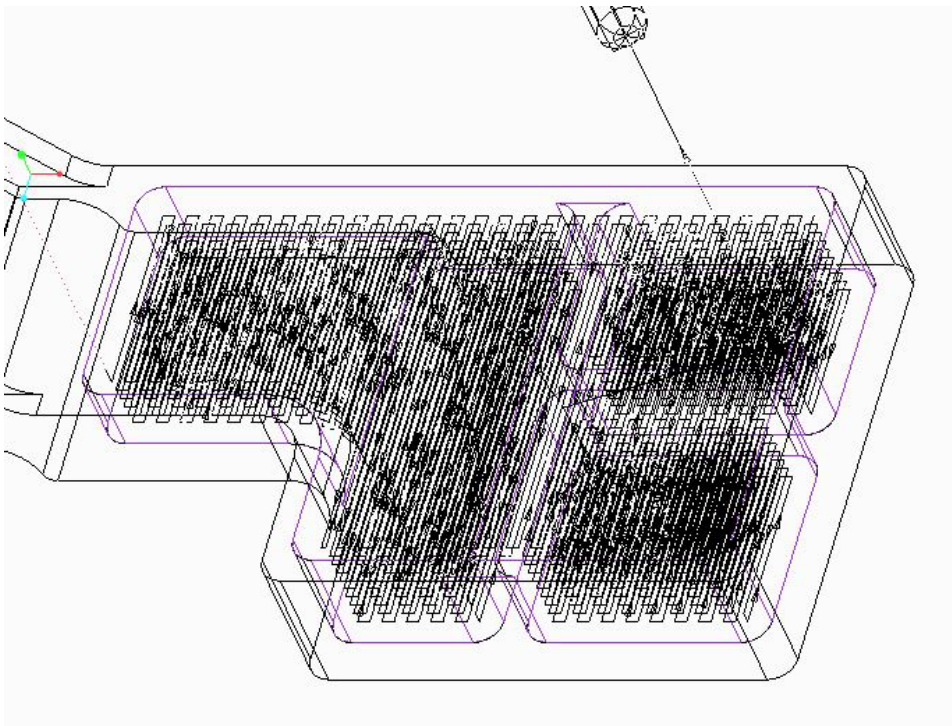

- Save your work**: Choose File > Save as > Save a backup.** Use **Organize,** and create a new folder. This action puts all the files necessary for running a machining simulation in this folder and enables you at a later time to view or continue your work .
- The folder must be handed in to the 41617 home page > **Assignments > Cam Week 2**, following instructions here.

ATTENTION

The final step of the above exercise (The play of the whole operation) must be **REVIEWED** and **APPROVED** by your **INSTRUCTOR** to make you eligible for a signature on your approval sheet confirming your successful completion of this tutorial.

Leave this file open and continue to the next exercise. Please complete all ***Day-2*** exercises before asking for review and approval.

PART 5: TRAJECTORY MILLING

Machine the assembly fixture shown below using **Trajectory Milling**. You need to utilize a standard tool and a sketched tool.

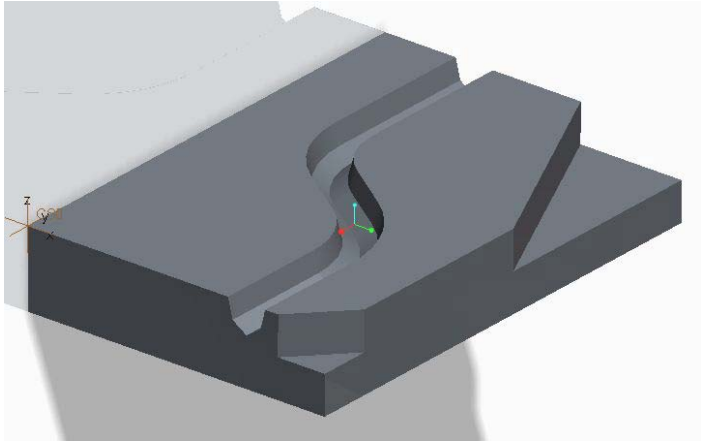

1. **open** the manufacturing model: **traj1.asm.**

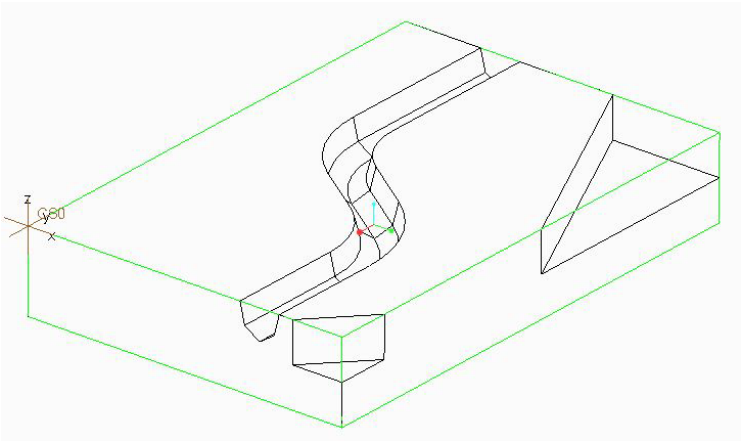

2. Create a new **Sequence** to machine the two large corner cuts with a large shell (insert) cutter.
   - On the top ribbon choose The **Mill** pane
   - Click the **Trajectory** icon
   - Choose the **Tool** icon in the left **side of the top ribbon** *- The **Tools Setup** box appears*
3. Define a **100** mm diameter by **50** mm high **Mil**ling tool. *- Not **End mill** as this will not work..*
   - Enter the Tool values and close the **Tools Setup** box with **Apply** and **OK**
4. **Retrieve** the parameters:
   - Choose the **Parameter** pane
   - In the lower right corner choose the **Edit Parameters** icon *- The familiar **Edit Parameters** dialog appears.*
   - In the **Edit Parameters dialogue** Choose **File / Open**, and locate the ***traj1_shell.mil*** and ignore the warnings by choosing **Close**.
   - Close the **Edit Parameters dialogue** with an **OK**
5. Make the **Retract Plane 25** mm along the **Z Axis.**
   - Choose the **Clearance** pane
   - For **Reference**, choose the top surface of the workpiece
   - Type **25** for **value** (= distance). *- The system now wants you to proceed to the **Tool Motions** pane*
6. Define the first boundary for machining.

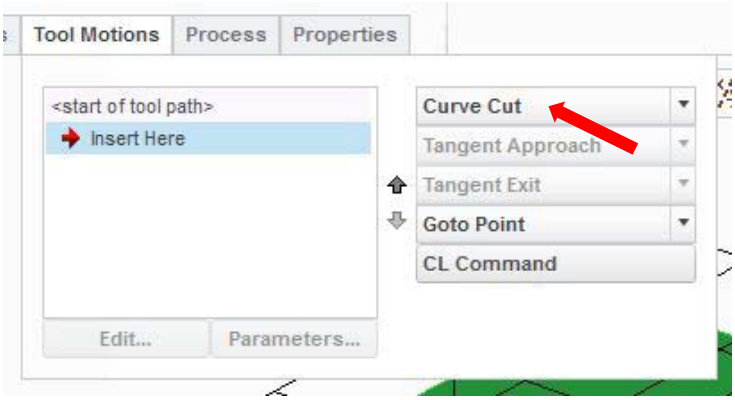

*The system now displays the **Tool Motions** dialog. You will notice that there are no existing tool paths...*

- Choose the **Curve Cut** action button

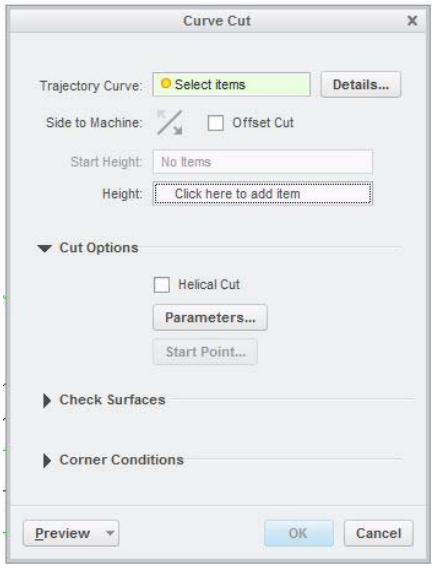

*The **Curve Cut** dialogue appears. The Trajectory Curve action box is ready for input, and the system wants you to select the geometry to be machined.*

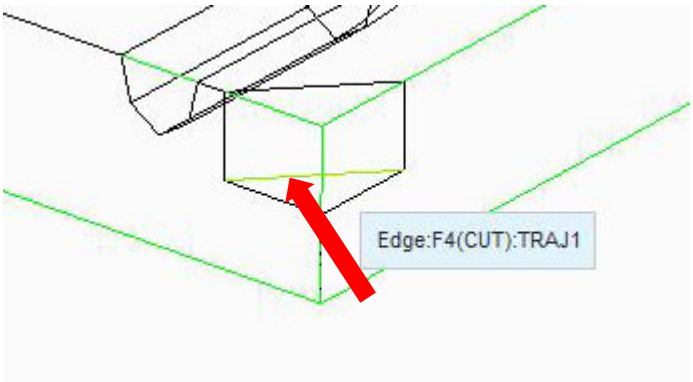

- Select the edge as indicated

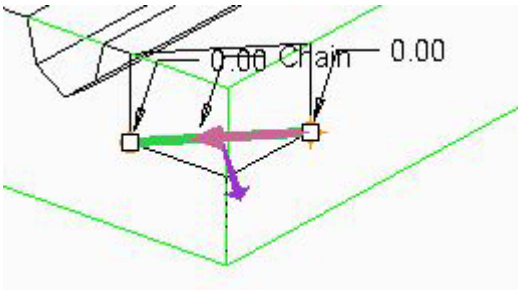

The system now displays an arrow on the boundary to show you the direction in which it intends to machine the edge....

- Choose the **Details** button to customize the **cut** parameters

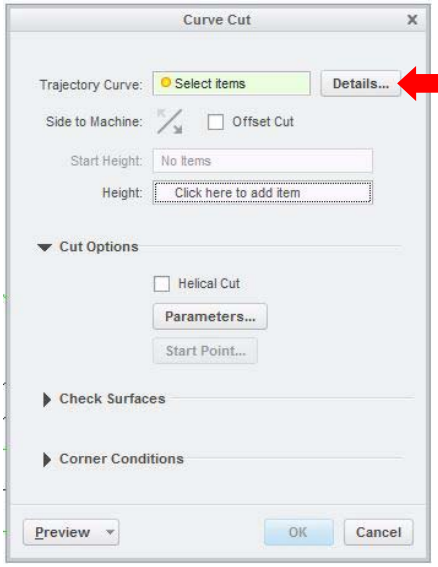

*The **Details** Button...*

- In the **Chain** dialogue, Accept the **Standard References** and click the **Options** tab

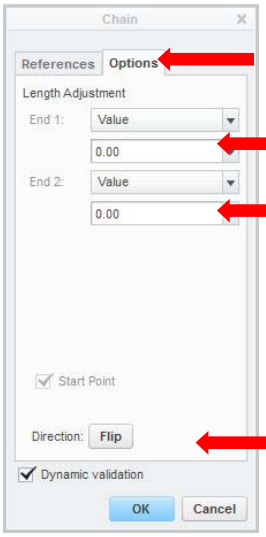

Options...

Lead-in...

Lead-out...

Flip...

- Enter a **Length adjustment 1** and a **Length adjustment 2,** each with a value of **75** to force the tool to begin the cut slightly offset from the workpiece. *- Please notice the impact the **Length adjustment** values have on the tool path(**Orange** lines).*
- Choose **Flip** to force the tool to begin the cut from the left side (viewport relative)
- Choose **OK** to close the Chain

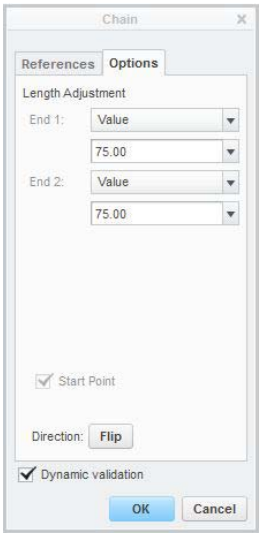

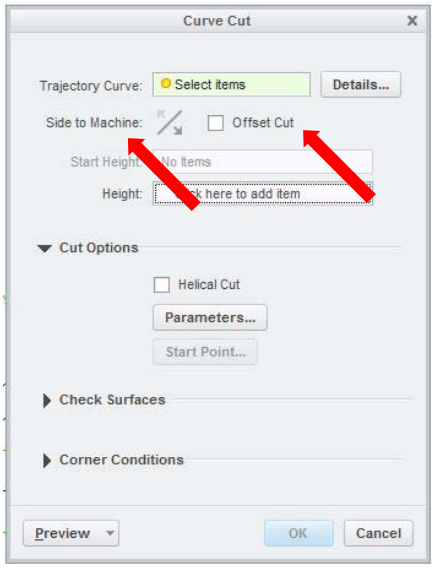

- Choose the **Side to Machine** and **Offset Cut** action buttons to ensure that the tool performs the cut correctly offset from the work-piece. The offset direction is to be **away** from the model

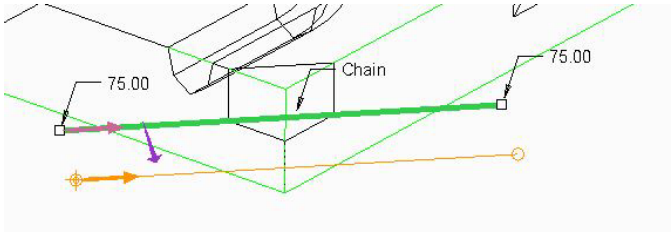

The modified curve trajectory...

- Accept the **Curve Trajectory Setup** by clicking **OK** in the bottom of the **Curve Cut** dialogue

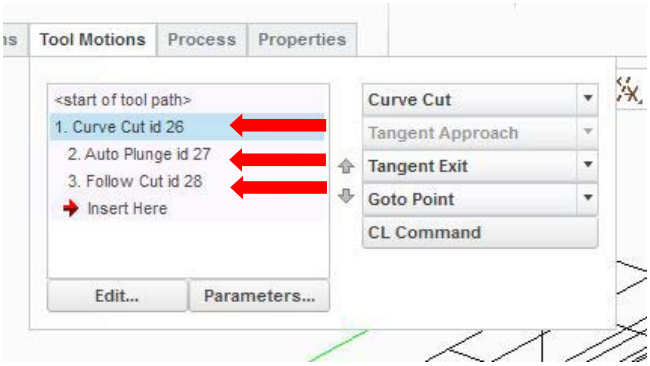

*New content in the **Tool Motions** box*

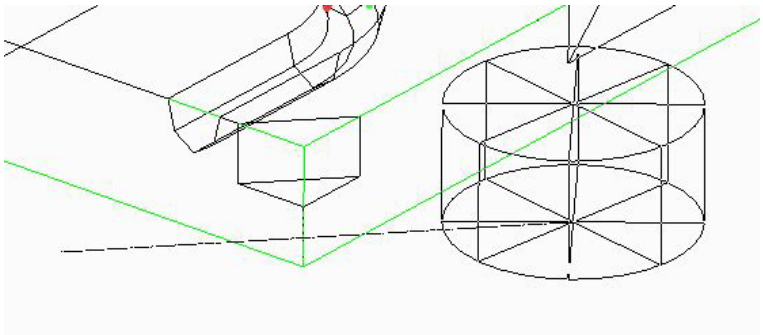

- Choose **Play Path** and **Screen Play** to review the cut
- Click the ✓ **Accept** icon to close the **Tool Motions** pane

7. Create another **Sequence** to machine the other corner cut.

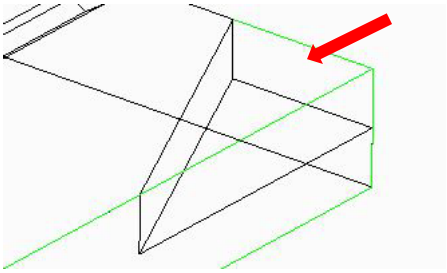

- In the **Model Tree,** click ***1. Trajectory [OP010]*** and choose **Edit Definition**
- Choose the **Tool Motions** pane
- Choose the **Curve Cut** action button

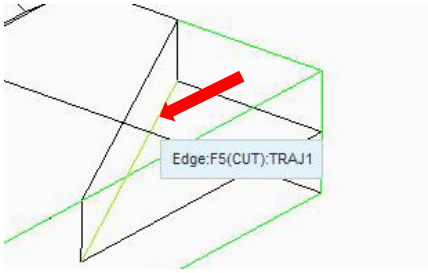

- In order to fill in the the **Trajectory Curve** action box, select the edge as indicated *- Yes, this is a repetition from before*

- In the Curve Cut dialogue click the **Details** button
- In the **Chain** dialogue, click the **Options** tab
- Enter a **Length adjustment 1** and a **Length adjustment 2,** each with a value of **75**, similar to the first cut
- **Flip** the direction of the cut to force the tool to start the cut from the left
- Choose the **Side to Machine** and **Offset Cut** action like before
- Accept the **Curve Trajectory Setup** by clicking **OK** in the bottom of the **Curve Cut**

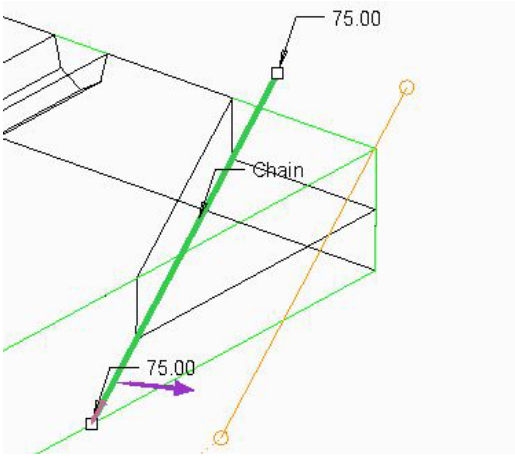

The modified curve trajectory...

- Choose **Play Path** and **Screen Play** to review the cut
- Click the  **Accept** icon to close the **Tool Motions** pane

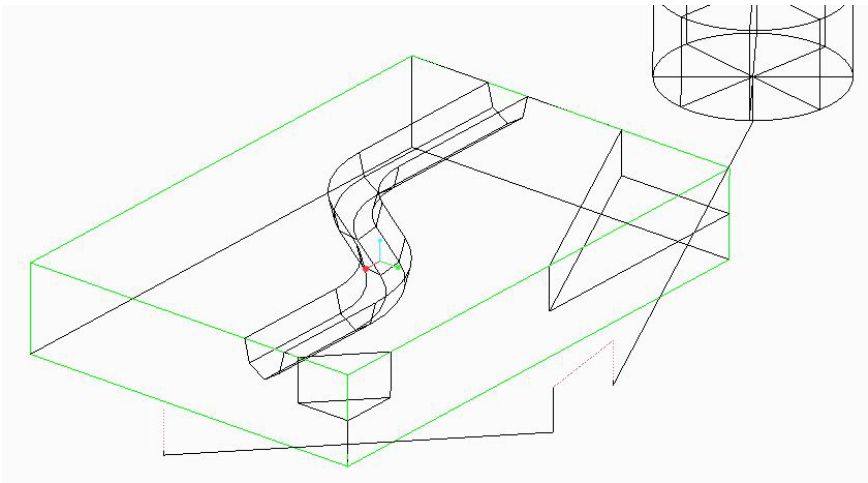

The system completes the second cut sequence and displays the combined tool paths…

8. Create another **Sequence** to machine the groove which runs down the interior of the top face of the part. In this case, you are going to use a sketched tool.

- On the top ribbon choose **Mill / Trajectory** *- The **Trajectory Dashboard** appears...*
- Choose the **Tool** icon *- The **Tools Setup** box appears*

9. Create a **Sketched Tool** to match the shape of the groove.

- In the **Tools Setup** dialog start a new tool of the ***Milling*** Type - Not ***End Mill***
- In the **Tools Setup** dialog, choose **Edit**
- Choose **Sketch** from the **Edit** drop down menu
- Choose the **Sketcher** action button in the **Tools Setup** dialog
- In the **Sketcher** window which displays, draw a **Sketch** with these dimensions:

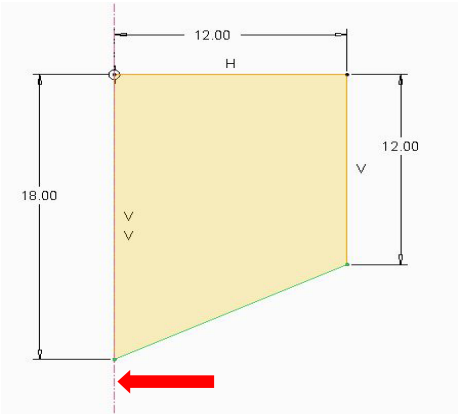

*Don't forget the **Centerline**...*

- When the sketch is correct, save and close it the normal way
  *- The **Sketcher** closes*

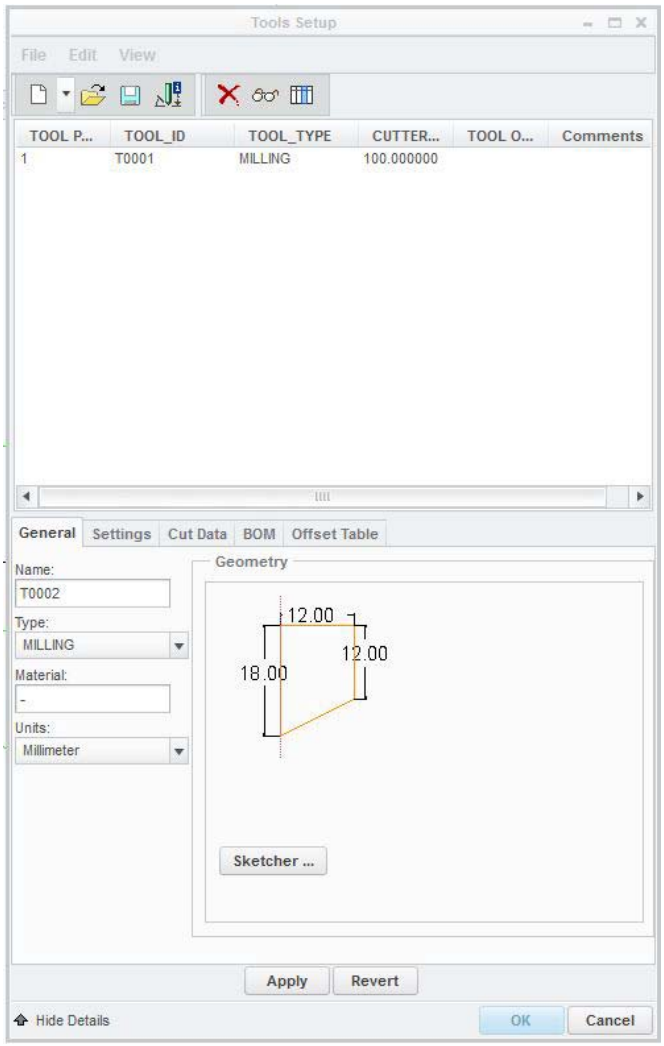

- Choose the **Apply** button in the **Tools Setup** box *- The new tool will now be added to the tool list in the left side of the box*
- Close the box with an **OK** *- The new tool will now be the active one.*

10. **Retrieve** the parameters:

- Choose the **Parameter** pane
- In the lower right corner choose the **Edit Machining Parameters** icon
- In the **Edit Parameters** dialogue Choose **File / Open**, and locate the ***traj1_shell.mil*** and ignore the warnings by choosing **Close**.
- Close the **Parameter** box with an **OK**

11. Define the **Tool Motions**

- Choose the **Tool Motions** pane / **Curve Cut**
- In the **Curve Cut** dialogue, choose the **Details** button
- In the **Chain** dialogue, under **References**, choose **Rule-based,** and verify that **Rule** is set to **Tangent**

- Select one of the bottom edges in the curved channel as shown

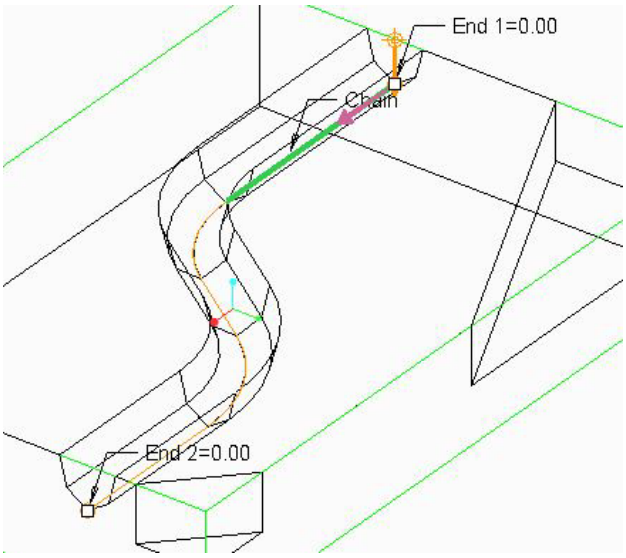

*The System auto-selects the whole bottom curve due to the **Tangent Rule** setup...*

- Still in the **Chain** box, now choose the **Options** Pane
- Enter a **Length adjustment 1** and a **Length adjustment 2,** each with a value of **50 mm**
- Check that the tool (the arrow) is running from right to left - use the **Flip** button if not
- Choose **OK** to close the **Chain** dialog

*Since you are going to drive the cutter down the center of the slot, there is no **offset** required. Check that it is turned off, it is easy to forget it.*

- Choose **OK** to close the **Curve Cut** dialogue provided your trajectory matches the illustration below

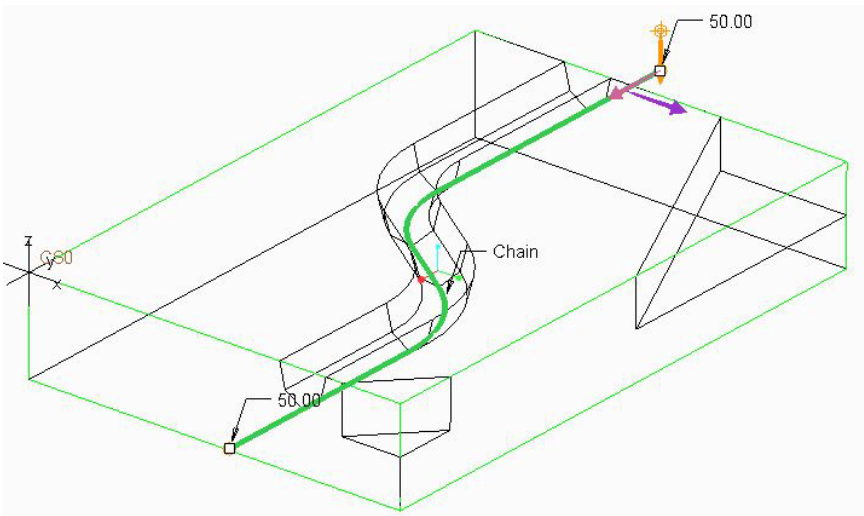

- Close the **Trajectory Dashboard** with the > **Accept** icon

12. Use the **CL Data** option to play the entire **Operation.**
    - On the **Model Tree** locate **OP010 [MACH01]**, rightclick it and choose **Play Path** - *This will play the whole operation (the two sequences) in one continous motion*

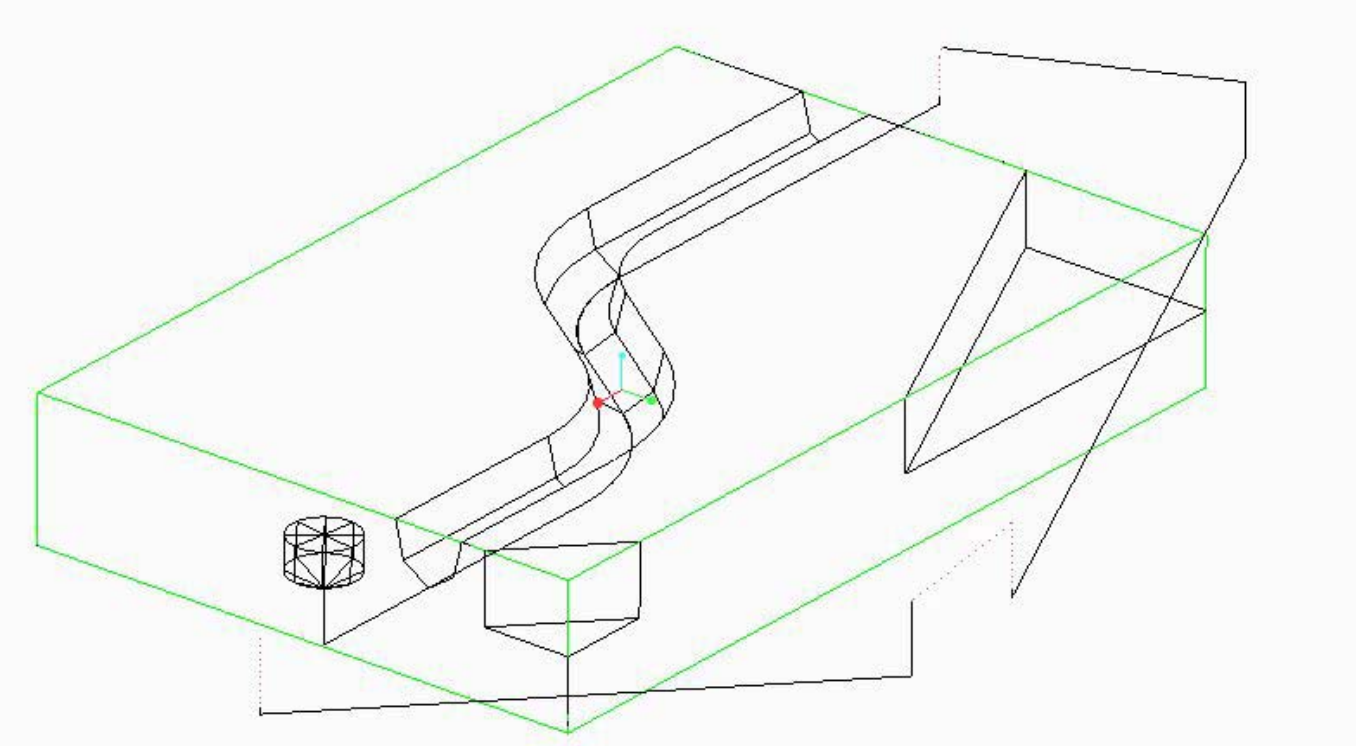

- Save your work**: Choose File > Save as > Save a backup.** Use **Organize,** and create a new folder. This action puts all the files necessary for running a machining simulation in this folder and enables you at a later time to view or continue your work .
- The folder must be handed in to the 41617 home page > **Assignments > Cam Week 2**, following instructions here.

ATTENTION
The final step of the above exercise must be **REVIEWED** and **APPROVED** by your **INSTRUCTOR** to make you eligible for a signature on your approval sheet confirming your successful completion of this tutorial.

Please open your three completed ***ATTENTION*** - marked ***Day-2*** exercises prior to requesting review and approval